Cambium Networks™

# INSTALLATION GUIDE

# PTP 820C HP

### Accuracy

While reasonable efforts have been made to assure the accuracy of this document, Cambium Networks assumes no liability resulting from any inaccuracies or omissions in this document, or from use of the information obtained herein. Cambium reserves the right to make changes to any products described herein to improve reliability, function, or design, and reserves the right to revise this document and to make changes from time to time in content hereof with no obligation to notify any person of revisions or changes. Cambium does not assume any liability arising out of the application or use of any product, software, or circuit described herein; neither does it convey license under its patent rights or the rights of others. It is possible that this publication may contain references to, or information about Cambium products (machines and programs), programming, or services that are not announced in your country. Such references or information must not be construed to mean that Cambium intends to announce such Cambium products, programming, or services in your country.

### Copyrights

This document, Cambium products, and 3rd Party software products described in this document may include or describe copyrighted Cambium and other 3rd Party supplied computer programs stored in semiconductor memories or other media. Laws in the United States and other countries preserve for Cambium, its licensors, and other 3rd Party supplied software certain exclusive rights for copyrighted material, including the exclusive right to copy, reproduce in any form, distribute and make derivative works of the copyrighted material. Accordingly, any copyrighted material of Cambium, its licensors, or the 3rd Party software supplied material contained in the Cambium products described in this document may not be copied, reproduced, reverse engineered, distributed, merged or modified in any manner without the express written permission of Cambium. Furthermore, the purchase of Cambium products shall not be deemed to grant either directly or by implication, estoppel, or otherwise, any license under the copyrights, patents or patent applications of Cambium or other 3rd Party supplied software, except for the normal non-exclusive, royalty free license to use that arises by operation of law in the sale of a product.

### Restrictions

Software and documentation are copyrighted materials. Making unauthorized copies is prohibited by law. No part of the software or documentation may be reproduced, transmitted, transcribed, stored in a retrieval system, or translated into any language or computer language, in any form or by any means, without prior written permission of Cambium.

### License Agreements

The software described in this document is the property of Cambium and its licensors. It is furnished by express license agreement only and may be used only in accordance with the terms of such an agreement.

### High Risk Materials

Cambium and its supplier(s) specifically disclaim any express or implied warranty of fitness for any high-risk activities or uses of its products including, but not limited to, the operation of nuclear facilities, aircraft navigation or aircraft communication systems, air traffic control, life support, or weapons systems ("High Risk Use"). Any High Risk is unauthorized, is made at your own risk and you shall be responsible for any and all losses, damage or claims arising out of any High-Risk Use.

© 2019 Cambium Networks Limited. All Rights Reserved.

# Contents

**Contents** ..... **i**
**List of Figures** ..... **vi**
**List of Tables** ..... **i**
About This User Guide ..... 1
Contacting Cambium Networks ..... 1
Purpose ..... 2
Cross references ..... 2
Feedback ..... 2
Problems and warranty ..... 3
Reporting problems ..... 3
Repair and service ..... 3
Hardware warranty ..... 3
Security advice ..... 4
Warnings, cautions, and notes ..... 5
Warnings ..... 5
Cautions ..... 5
Notes ..... 5
Caring for the environment ..... 6
In EU countries ..... 6
In non-EU countries ..... 6
**Chapter 1: Product description** ..... **1-1**
Important Notes ..... 1-2
Safety Precautions & Declared Material ..... 1-3
Public and Occupational Boundary Distances Under Article 3.1(a) of the RE Directive ..... 1-3
General Equipment Precautions ..... 1-3
Précautions générales relatives à l'équipement ..... 1-4
Allgemeine Vorsichtsmaßnahmen für die Anlage ..... 1-5
Pre-Installation Instructions ..... 1-6
Packing ..... 1-7
Transportation and Storage ..... 1-7
Unpacking ..... 1-7
Inspection ..... 1-7
**Chapter 2: PTP 820C HP Overview** ..... **2-8**
PTP 820C HP Hardware Overview ..... 2-9
PTP 820C HP Interfaces ..... 2-10
System Components – Diplexer-Based Branching ..... 2-11
Diplexer-Based Branching – Radio Components ..... 2-11
Diplexer-Based Branching – Branching Components ..... 2-12

Diplexer-Based Branching – Accessory Components ..... 2-14
System Components – Channel Filter-Based Branching ..... 2-15
PTP 820C HP Models ..... 2-19
Models for Radio Unit ..... 2-19
Models for Diplexer Unit ..... 2-19
Models for Mediation Devices in Diplexer-Based Branching ..... 2-22
**Models for Mediation Devices in Channel Filter-Based Branching** ..... 2-23
Adaptors and Installation Kits ..... 2-24
Antenna Connection ..... 2-25
Power Specifications ..... 2-26
Electrical Requirements ..... 2-26
Power Connection Options ..... 2-26
Important Notes! ..... 2-26
Environmental Specifications ..... 2-27
**Chapter 3: Grounding the PTP 820C HP Unit ..... 3-1**
**Chapter 4: Cable Installation and Grounding ..... 4-3**
Minimum and Maximum Cable Diameter ..... 4-4
Cable Grounding ..... 4-5
To Connect the Grounding kit ..... 4-5
Power Source ..... 4-8
Surge Protection ..... 4-9
Available Cable Options ..... 4-10
Fiber Optic Cables - Single Mode ..... 4-10
Fiber Optic Cables - Multi Mode ..... 4-10
DC Cable and Connector ..... 4-10
Cables for MIMO Connections ..... 4-11
Ethernet Cable and Specifications ..... 4-11
Outdoor Ethernet Cable Specifications ..... 4-13
Outdoor DC Cable Specifications ..... 4-13
Securing the Cables ..... 4-15
Special Instructions for use of Glands ..... 4-16
General Installation Procedure ..... 4-17
Connecting an Optical Fiber Cable and SFP ..... 4-21
Connecting a DC Power Cable ..... 4-25
Connecting the Ethernet Cable ..... 4-28
Preparing the Ethernet Cable and Plug-in Field ..... 4-28
Preparing the Ethernet Cable Already Assembled ..... 4-30
Connection of Ethernet Cable to PTP 820C HP ..... 4-31
Management Connection for 1+1/2+2 HSB Configurations ..... 4-34
Preparing a MIMO/Protection Signaling Cable ..... 4-34
Connecting the MIMO/Protection Splitters and Protection Signaling Cable ..... 4-34
**Chapter 5: Generic Installation Procedures and Notes ..... 5-1**

General Notes Concerning All Installation Procedures ..... 5-2
**Chapter 6: Installation Instructions for Configurations with Diplexer-Based Branching ..... 6-3**
Torque Requirements ..... 6-3
General Radio Installation ..... 6-4
Installing the Diplexer on the Radio ..... 6-6
List of Items ..... 6-6
Required Tools ..... 6-6
Procedure ..... 6-6
**Chapter 7: PTP 820C HP Detailed Configurations Description ..... 7-1**
2+0 Dual Polarization Direct Mount ..... 7-2
List of Items ..... 7-2
Required Tools ..... 7-2
Procedure ..... 7-3
2+0 Dual Polarization Remote Mount ..... 7-5
List of Items ..... 7-6
Required Tools ..... 7-6
Procedure ..... 7-6
2+0 Single Polarization Direct Mount ..... 7-12
List of Items ..... 7-12
Required Tools ..... 7-12
Procedure ..... 7-12
2+2 HSB Double Polarization Direct Mount ..... 7-15
List of Items ..... 7-15
Required Tools ..... 7-15
Procedure ..... 7-15
2+2 HSB Double Polarization Remote Mount ..... 7-19
List of Items ..... 7-19
Required Tools ..... 7-19
Procedure ..... 7-20
2+2 HSB Single Polarization Direct Mount ..... 7-27
List of Items ..... 7-27
Required Tools ..... 7-27
Procedure ..... 7-27
2 x 2+0 Dual Polarization Direct Mount ..... 7-31
List of Items ..... 7-31
Required Tools ..... 7-31
Procedure ..... 7-31
2 x 2+0 Dual Polarization Remote Mount ..... 7-34
List of Items ..... 7-34
Required Tools ..... 7-34
Procedure ..... 7-35
2 x 2+0 Single Polarization Direct Mount ..... 7-40

List of Items ..... 7-40
Required Tools ..... 7-40
Procedure ..... 7-40
2+2 HSB Single Polarization Remote Mount ..... 7-44
2x2 LoS MIMO Direct Mount ..... 7-49
List of Items ..... 7-49
Required Tools ..... 7-49
Procedure ..... 7-49
2x2 LoS MIMO Remote Mount ..... 7-52
List of Items ..... 7-52
Required Tools ..... 7-52
Procedure ..... 7-53
4x4 LoS MIMO Direct Mount ..... 7-55
List of Items ..... 7-55
Required Tools ..... 7-55
Procedure ..... 7-56
4+0 Single/Dual Polarization Direct Mount ..... 7-58
List of Items ..... 7-58
Required Tools ..... 7-58
Procedure ..... 7-58
4+0 with Dual Circulator Direct Mount ..... 7-62
4+0 Dual Polarization, Remote Mount ..... 7-63
List of Items ..... 7-63
Required Tools ..... 7-63
Procedure ..... 7-63
4+0 with Dual Circulator Remote Mount ..... 7-68
Dual Circulator Multi-Carrier Kit Installation ..... 7-69
List of Items ..... 7-69
Required Tools ..... 7-69
Procedure ..... 7-69
AFR 1+0 Hub Site ..... 7-75
List of Items ..... 7-75
Required Tools ..... 7-75
Procedure ..... 7-76
**Chapter 8: Installation Instructions for Configurations with Channel Filter-Based Branching ..... 8-79**
Channel Filter-Based Branching – Component Assembly ..... 8-79
Assembling the OCU Mounting Kit ..... 8-79
Assembling the OCU ..... 8-82
Assembling a Short U-Bend ..... 8-90
Assembling a Long U-Bend ..... 8-92
Assembling a Termination ..... 8-94
Assembling a Splitter or Coupler for Filter-Based Branching ..... 8-95

Channel Filter-Based Branching – Configurations ..... 8-97
2+0 Single Polarization ..... 8-97
2+0 Dual Polarization ..... 8-99
4+0 Single Polarization ..... 8-101
4+0 Dual Polarization ..... 8-103
6+0 Single Polarization ..... 8-104
6+0 Dual Polarization ..... 8-107
8+0 Single Polarization ..... 8-110
8+0 Dual Polarization ..... 8-113
1+1 HSB ..... 8-116
2+2 HSB Single Polarization ..... 8-119
2+2 HSB Dual Polarization ..... 8-125
**Chapter 9: Installing PTP 820C HP on Third-Party Antenna Adaptors ..... 9-128**
Special Note on Converting ValuLine 3 Antennas ..... 9-1
**Chapter 10: Acceptance and Commissioning Procedures ..... 10-2**
Site Acceptance Procedure ..... 10-1
Site Acceptance Checklist Notes ..... 10-5
Radio Link Commissioning Procedure ..... 10-6
Scope ..... 10-6
Commissioning Test ..... 10-6
PTP 820 Commissioning Log ..... 10-8

# List of Figures

Figure 1 PTP 820C HP Rear View (Left) and Front View (Right) ..... 2-9
Figure 2 Cable Gland Construction ..... 2-9
Figure 3 PTP 820C HP Interfaces ..... 2-10
Figure 4 PTP 820C HP Radio Unit ..... 2-11
Figure 5 PTP 820C HP Diplexer Unit ..... 2-11
Figure 6 OMT ..... 2-12
Figure 7 Space Diversity Branching Device ..... 2-12
Figure 8 Splitter ..... 2-13
Figure 9 Dual Coupler/Splitter/Circulator ..... 2-13
Figure 10 Remote Pole Mount ..... 2-14
Figure 11 Remote Pole Mount Adaptor ..... 2-14
Figure 12 PTP 820C HP OCU Unit ..... 2-16
Figure 13 PTP 820C HP Branching Pole Profile (Part of PTP 820C HP Filters Remote Mount Kit) ..... 2-16
Figure 14: Short U-Bend ..... 2-17
Figure 15: Long U-Bend ..... 2-17
Figure 16: Splitter/Coupler ..... 2-17
Figure 17: Termination ..... 2-17
Figure 18 Radio Unit and Diplexer Unit ..... 2-18
Figure 19 Grounding cable ..... 4-5
Figure 20 Cable design ..... 4-12
Figure 21 MIMO/Protection Signaling Cable Pinouts ..... 4-34
Figure 22 4x4 MIMO or HSB Protection Configuration with External Management ..... 4-35
Figure 23 Transparent Pressure Windows ..... 5-2
Figure 24 PTP 820C HP Installation – Radio and Diplexers Unit Pre-Assembled ..... 6-4
Figure 25 PTP 820C HP Installation – Attaching the Diplexers Unit Before the Radio Unit ..... 6-5
Figure 26 Fitting the Diplexer Unit to the Radio Unit - Radio Side ..... 6-7
Figure 27 Fitting the Diplexer Unit to the Radio Unit - Diplexer Unit Side ..... 6-7
Figure 28 Radio and Diplexer Units Together ..... 6-8
Figure 29 Hook and Carrying Handle ..... 6-8
Figure 30 Securing the Diplexer Unit to the Radio Unit ..... 6-9
Figure 31 6 GHz – Mounting the First Adaptor ..... 7-8
Figure 32 Remote Pole Mount Kit- 6-11 GHz ..... 7-9
Figure 33 Remote Pole Mount Kit – 4-5 GHz ..... 7-9
Figure 34 Remote Pole Mount Kit – 6-11 GHz ..... 7-10
Figure 35 Remote Pole Mount Kit – 4-5 GHz ..... 7-10
Figure 36 6 GHz – Mounting the First Adaptor ..... 7-36
Figure 37 6 GHz – Mounting the Second Adaptor ..... 7-36
Figure 38 Mounting the Single Adaptor for 7, 8, 10, and 11 GHz ..... 7-37
Figure 39 4+0 with Dual Circulator Direct Mount ..... 7-62

Figure 40  4+0 Configuration ..... 7-74
Figure 41 Branching Pole Profile ..... 8-80
Figure 42 Branching Pillars (with Screws, Nuts, and Washers) ..... 8-80
Figure 43 1, 2, 4 – OCU Kit (Body, Rail, and M8x25 Screws ..... 8-83
Figure 44 3- PTP 820C HP Radio ..... 8-83
Figure 45 PTP 820C HP Radio ..... 8-83
Figure 46 Left Rail Configuration ..... 8-85
Figure 47 Right Rail Configuration ..... 8-85
Figure 48 Left and Right Rail Configurations Together ..... 8-85
Figure 49 Attaching the Radio to the OCU ..... 8-86
Figure 50 Order of Fastening Screws ..... 8-86
Figure 51 Angling the OCU Rail Underneath the Nose of the Branching Pole Profile ..... 8-87
Figure 52 Final Position of OCU-Radio Locked into Branching Pole Profile ..... 8-87
Figure 53 Securing the OCU-Radio Unit to the Branching Pole Profile ..... 8-88
Figure 54 Raising the Assembly Via Crane ..... 8-89
Figure 55  1 – Short U-Bend ..... 8-90
Figure 56 1 – Long U-Bend ..... 8-92

# List of Tables

Table 1: PTP 820C HP Radio Unit Model Placeholders ..... 2-19
Table 2: PTP 820C HP Diplexer Unit Model Placeholders ..... 2-20
Table 3: Models for Mediation Devices (Diplexer-Based Branching) ..... 2-22
Table 4: PTP 820C HP Branching Unit Marketing Models ..... 2-23
Table 5: Adaptors and Installation Kits ..... 2-24
Table 6: Antenna Circ. Adapters for OMT ..... 2-24
Table 7: Antenna Flanges ..... 2-25
Table 8: Power connection options part numbers ..... 2-26
Table 9: Grounding Cable ..... 3-1
Table 10: Cable Grounding Kit ..... 4-5
Table 11: Fiber Optic Cables - Single Mode part numbers ..... 4-10
Table 12: Fiber Optic Cables - Multi Mode ..... 4-10
Table 13: DC cable and connector ..... 4-10
Table 14: Cables for MIMO Connections ..... 4-11
Table 15: Ehternet cable ..... 4-11
Table 16: Ethernet cable Color Code ..... 4-12
Table 17: Ethernet Cable Electrical Requirements ..... 4-13
Table 18: Outdoor DC Cable Electrical Requirements ..... 4-13
Table 19: Glands kit ..... 4-16
Table 20: Materials for preparing Ethernet Data Cables ..... 4-28
Table 21: 3rd-Party Adaptors ..... 9-128

# About This User Guide

This guide describes thePTP 820C HP installation procedures and provides additional information concerning system parts and frequency bands

This guide contains the following chapters:

- Chapter 1: Product description
- Chapter 2: PTP 820C HP Overview
- Chapter 3: Grounding the PTP 820C HP Unit
- Chapter 4: Cable Installation and Grounding
- Chapter 5: Generic Installation Procedures and Notes
- Chapter 6: Installation Instructions for Configurations with Diplexer-Based Branching
- Chapter 7: PTP 820C HP Detailed Configurations Description
- Chapter 8: Installation Instructions for Configurations with Channel Filter-Based Branching
- Chapter 9: Installing PTP 820C HP on Third-Party Antenna Adaptors
- Chapter 10: Acceptance and Commisioning Procedures

# Contacting Cambium Networks

| | |
|---|---|
| Support website: | https://support.cambiumnetworks.com |
| Main website: | http://www.cambiumnetworks.com |
| Sales enquiries: | solutions@cambiumnetworks.com |
| Support enquiries: | https://support.cambiumnetworks.com |
| Repair enquiries | https://support.cambiumnetworks.com |
| Telephone number list: | http://www.cambiumnetworks.com/support/contact-support |
| Address: | Cambium Networks Limited,<br>Linhay Business Park,<br>Eastern Road,<br>Ashburton,<br>Devon, UK,<br>TQ13 7UP |

## Purpose

Cambium Networks Point-To-Point (PTP) documents are intended to instruct and assist personnel in the operation, installation and maintenance of the Cambium PTP equipment and ancillary devices. It is recommended that all personnel engaged in such activities be properly trained.

Cambium disclaims all liability whatsoever, implied or express, for any risk of damage, loss or reduction in system performance arising directly or indirectly out of the failure of the customer, or anyone acting on the customer's behalf, to abide by the instructions, system parameters, or recommendations made in this document.

## Cross references

References to external publications are shown in italics. Other cross references, emphasized in blue text in electronic versions, are active links to the references.

This document is divided into numbered chapters that are divided into sections. Sections are not numbered, but are individually named at the top of each page, and are listed in the table of contents.

## Feedback

We appreciate feedback from the users of our documents. This includes feedback on the structure, content, accuracy, or completeness of our documents. Send feedback to support@cambiumnetworks.com.

# Problems and warranty

## Reporting problems

If any problems are encountered when installing or operating this equipment, follow this procedure to investigate and report:

1 Search this document and the software release notes of supported releases.

2 Visit the support website.

3 Ask for assistance from the Cambium product supplier.

4 Gather information from affected units, such as any available diagnostic downloads.

5 Escalate the problem by emailing or telephoning support.

## Repair and service

If unit failure is suspected, obtain details of the Return Material Authorization (RMA) process from the support website.

## Hardware warranty

Cambium's standard hardware warranty is for one (1) year from date of shipment from Cambium Networks or a Cambium distributor. Cambium Networks warrants that hardware will conform to the relevant published specifications and will be free from material defects in material and workmanship under normal use and service. Cambium shall within this time, at its own option, either repair or replace the defective product within thirty (30) days of receipt of the defective product. Repaired or replaced product will be subject to the original warranty period but not less than thirty (30) days.

To register PTP products or activate warranties, visit the support website. For warranty assistance, contact the reseller or distributor.

**Caution**

Using non-Cambium parts for repair could damage the equipment or void warranty. Contact Cambium for service and repair instructions.

Portions of Cambium equipment may be damaged from exposure to electrostatic discharge. Use precautions to prevent damage.

# Security advice

Cambium Networks systems and equipment provide security parameters that can be configured by the operator based on their particular operating environment. Cambium recommends setting and using these parameters following industry recognized security practices. Security aspects to be considered are protecting the confidentiality, integrity, and availability of information and assets. Assets include the ability to communicate, information about the nature of the communications, and information about the parties involved.

In certain instances, Cambium makes specific recommendations regarding security practices, however the implementation of these recommendations and final responsibility for the security of the system lies with the operator of the system.

# Warnings, cautions, and notes

The following describes how warnings and cautions are used in this document and in all documents of the Cambium Networks document set.

## Warnings

Warnings precede instructions that contain potentially hazardous situations. Warnings are used to alert the reader to possible hazards that could cause loss of life or physical injury. A warning has the following format:

**Warning**

Warning text and consequence for not following the instructions in the warning.

## Cautions

Cautions precede instructions and are used when there is a possibility of damage to systems, software, or individual items of equipment within a system. However, this damage presents no danger to personnel. A caution has the following format:

**Caution**

Caution text and consequence for not following the instructions in the caution.

## Notes

A note means that there is a possibility of an undesirable situation or provides additional information to help the reader understand a topic or concept. A note has the following format:

**Note**

Note text.

# Caring for the environment

The following information describes national or regional requirements for the disposal of Cambium Networks supplied equipment and for the approved disposal of surplus packaging.

## In EU countries

The following information is provided to enable regulatory compliance with the European Union (EU) directives identified and any amendments made to these directives when using Cambium equipment in EU countries.

### Disposal of Cambium equipment

European Union (EU) Directive 2002/96/EC Waste Electrical and Electronic Equipment (WEEE)

Do not dispose of Cambium equipment in landfill sites. For disposal instructions, refer to http://www.cambiumnetworks.com/support

### Disposal of surplus packaging

Do not dispose of surplus packaging in landfill sites. In the EU, it is the individual recipient's responsibility to ensure that packaging materials are collected and recycled according to the requirements of EU environmental law.

## In non-EU countries

In non-EU countries, dispose of Cambium equipment and all surplus packaging in accordance with national and regional regulations.

# Chapter 1: Product description

Cambium's PTP 820C HP represents a new generation of radio technology, capable of high bit rates and longer reach, and suitable for diverse deployment scenarios.

PTP 820C HP supports cutting edge capacity-boosting techniques, such as QPSK to 2048 QAM and Header De-Duplication, to offer a high capacity solution for every network topology and every site configuration. Its green, compact, all-outdoor configuration makes PTP 820C HP ideal for any location.

This chapter includes:


- Important Notes
- Safety Precautions & Declared Materials
- Pre-Installation Instructions

# Important Notes

- For the warranty to be honored, install the unit in accordance with the instructions in this manual.
- Any changes or modifications of equipment not expressly approved by the manufacturer could void the user's authority to operate the equipment and the warranty for such equipment.
- PTP 820C HP is intended for installation in a restricted access location.
- PTP 820C HP must be installed and permanently connected to protective earth by qualified service personnel in accordance with applicable national electrical codes.

# Safety Precautions & Declared Material

## Public and Occupational Boundary Distances Under Article 3.1(a) of the RE Directive

Based on the highest nominal output power of the PTP 820C HP:

- The public exposure of compliance boundary distance is 24.6m.
- The occupational exposure of compliance boundary distance is 4.9m. This is the worst case for the highest nominal output power, using antennas up to 3 ft. For all other configurations, the compliance boundary distance is 0.

**Note**

Note that even when the compliance boundary is a non-zero value, this only applies within the bore sight of the antenna dish. Therefore, during work within and close to the front of the antenna, make sure the transmitters are turned off. As long as the transmitters are turned off during any work on the system, the occupational exposure limit is not of concern to workers operating in or around the parabolic dish antenna.

## General Equipment Precautions

| | |
|---|---|
| | **Caution**<br>To avoid malfunctioning or personnel injuries, equipment or accessories/kits/plug-in unit installation, requires qualified and trained personnel. Changes or modifications not expressly approved by Cambium Networks can void user's authority to operate the equipment. |
| | **Caution**<br>Where special cables, shields, adapters and grounding kits are supplied or described in this manual, these items must be used to comply with the FCC regulations. |
| | **Caution**<br>Use of controls, adjustments, or performing procedures other than those specified herein, may result in hazardous radiation exposure. |
| | **Caution**<br>When working with aPTP 820C HP, note the following risk of electric shock and energy hazard:<br>Disconnecting one power supply disconnects only one power supply module. To isolate the unit completely, disconnect all power supplies. |
| | **Caution**<br>Machine noise information order: 3. GPSGV, the highest sound pressure level amounts to 70 dB (A) or less, in accordance with ISO EN 7779. |

**Antistatic**

Static electricity may cause body harm, as well as harm to electronic components inside the device. Anyone responsible for the installation or maintenance of thePTP 820C HP must use an ESD Wrist Strap. ESD protection measures must be observed when touching the unit. To prevent damage, before touching components inside the device, all electrostatic must be discharged from both personnel and tools.

**Caution**

In Norway and Sweden:

Equipment connected to the protective earthing of the building installation through the mains connection or through other equipment with a connection to protective earthing – and to a cable distribution system using coaxial cable, may in some circumstances create a fire hazard. Connection to a cable distribution system has therefore to be provided through a device providing electrical isolation below a certain frequency range (galvanic isolator, see EN 60728-11).

Utstyr som er koplet til beskyttelsesjord via nettplugg og/eller via annet jordtilkoplet utstyr – og er tilkoplet et kabel-TV nett, kan forårsake brannfare. For å unngå dette skal det ved tilkopling av utstyret til kabel-TV nettet installeres en galvanisk isolator mellom utstyret og kabel- TV nettet.

Utrustning som är kopplad till skyddsjord via jordat vägguttag och/eller via annan utrustning och samtidigt är kopplad till kabel-TV nät kan i vissa fall medföra risk för brand. För att undvika detta skall vid anslutning av utrustningen till kabel-TV nät galvanisk isolator finnas mellan utrustningen och kabel-TV nätet.

## Précautions générales relatives à l'équipement

**Caution**

L'utilisation de commandes ou de réglages ou l'exécution de procédures autres que celles spécifiées dans les présentes peut engendrer une exposition dangereuse aux rayonnements.

**Caution**

L'usage de PTP 820C HP s'accompagne du risque suivant d'électrocution et de danger électrique : le débranchement d'une alimentation électrique ne déconnecte qu'un module d'alimentation électrique. Pour isoler complètement l'unité, il faut débrancher toutes les alimentations électriques.

**Caution**

Bruit de machine d'ordre - 3. GPSGV, le plus haut niveau de pression sonore s'élève à 70 dB (A) au maximum, dans le respect de la norme ISO EN 7779.

## Allgemeine Vorsichtsmaßnahmen für die Anlage

| | |
|---|---|
| | **Caution**<br>Wenn andere Steuerelemente verwendet, Einstellungen vorgenommen oder Verfahren durchgeführt werden als die hier angegebenen, kann dies gefährliche Strahlung verursachen. |

| | |
|---|---|
| | **Caution**<br>Beachten Sie beim Arbeiten mit PTP 820C HP das folgende Stromschlag- und Gefahrenrisiko: Durch Abtrennen einer Stromquelle wird nur ein |
| | **Caution**<br>Stromversorgungsmodul abgetrennt. Um die Einheit vollständig zu isolieren, trennen Sie alle Stromversorgungen ab.<br>Maschinenlärminformations-Verordnung - 3. GPSGV, der höchste Schalldruckpegel beträgt 70 dB(A) oder weniger gemäß EN ISO 7779. |

# Pre-Installation Instructions

This chapter describes the Pre-Installation instructions for PTP 820C HP.

This chapter includes:

Packing

Transportation and Storage

Unpacking

Inspection

## Packing

The equipment must be packed and sealed in moisture absorbing bags.

## Transportation and Storage

The equipment cases are prepared for shipment by air, truck, railway and sea, suitable for handling by forklift trucks and slings. The cargo must be kept dry during transportation, in accordance with ETS 300 019-1-2, Class 2.3. For sea-transport, deck-side shipment is not permitted. Carrier-owned cargo containers must be used.

It is recommended that the equipment be transported to the installation site in its original packing case.

If intermediate storage is required, the packed equipment must be stored in a dry and cool environment, and out of direct sunlight, in accordance with ETS 300 019-1-1, Class 1.2.

## Unpacking

The equipment is packed in sealed plastic bags and moisture absorbing bags are inserted. Any separate sensitive product such as printed boards, are packed in anti-static handling bags. The equipment is further packed in special designed cases.

Marking is done according to standard practice unless otherwise specified by customers. The following details must be marked:

- Customer's address
- Contract No
- Site name (if known)
- Case Number

## Inspection

Check the packing lists and ensure that correct parts numbers quantities of goods have arrived. Inspect for any damage on the cases and equipment. To report any damage or discrepancy to a Cambium Networks representative, use e-mail or fax.

# Chapter 2: PTP 820C HP Overview

PTP 820C HP combines high TX power of up to 35 dBm with MultiCore radio technology, QPSK to 2048 QAM modulation, and line-of-sight (LoS) 4x4 MIMO in a compact, all-outdoor design.

PTP 820C HP is easily and quickly deployable compared with fiber, enabling operators to achieve faster time to new revenue streams, lower total cost of ownership, and long-term peace of mind.

PTP 820C HP's MultiCore architecture enables operators to start with a single core with the option of enabling the second core remotely when network capacity requirements increase.

The 4x4 LoS MIMO feature adds yet another element of scalability, enabling operators to quadruple capability with the addition of a single PTP 820C HP unit and antenna at each end of the link while utilizing the same exact frequency channel with no network replanning.

PTP 820C HP can be used with wide diplexer-based branching, enabling direct mount installation. Diplexers can be used for direct mount configurations of up to 4+0.

PTP 820C HP can also be used with channel filter-based branching, enabling configurations of up to 8+0 per polarization in remote mount and all-indoor configurations.

To maximize operational flexibility, both diplexers and channel filters are provided separately for the radio units, enabling the diplexers or filters to be changed in the field with minimal downtime and no risk of impairing the unit's sealing.

To maximize operational flexibility, both diplexer covers and outdoor circulator units (OCUs) are provided separately from the radio units, enabling the diplexer covers or OCUs to be changed in the field with minimal downtime and no risk of impairing the RFU's sealing.

This chapter describes the PTP 820C HP components, interfaces and mediation devices.

This chapter includes:

PTP 820C HP Hardware Overview

MultiCore Mediation Devices (MCMD)

Adaptors and Installation Kits

Antenna Connection

Power Specifications

Environmental Specifications

# PTP 820C HP Hardware Overview

PTP 820C HP features an all-outdoor dual-carrier architecture consisting of a single unit.

Figure 1 PTP 820C HP Rear View (Left) and Front View (Right)

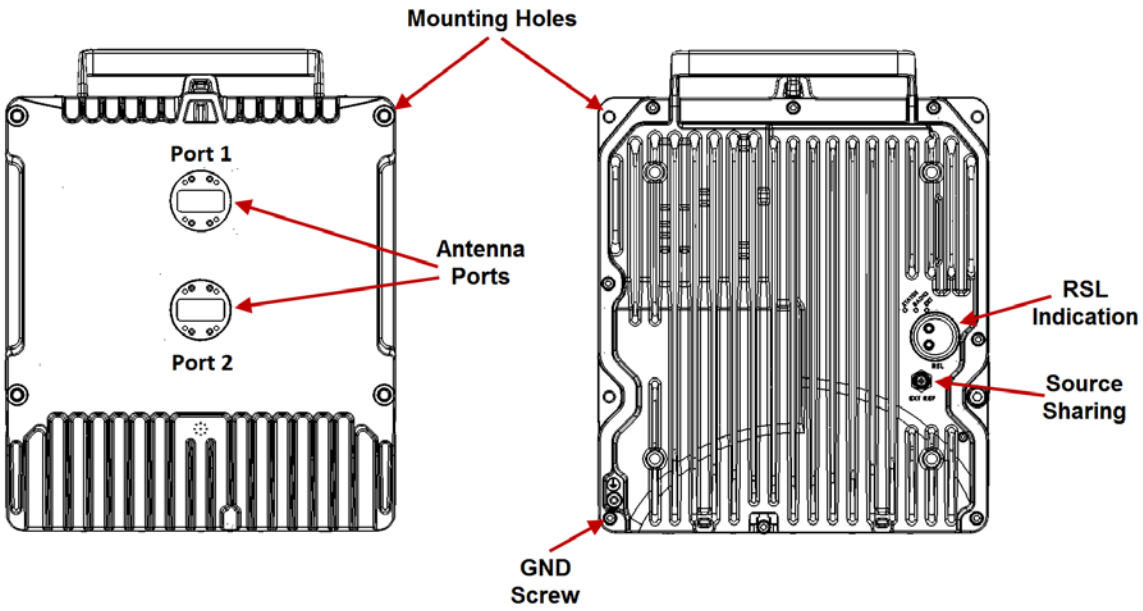


Figure 2 Cable Gland Construction

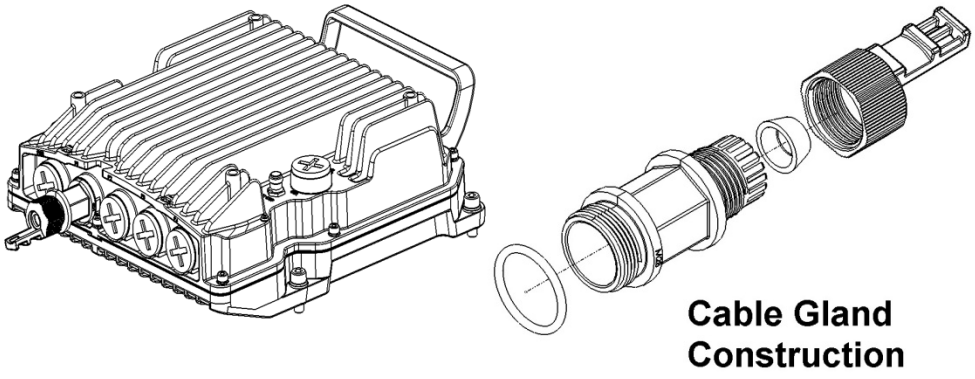

# PTP 820C HP Interfaces

**Figure 3** PTP 820C HP Interfaces

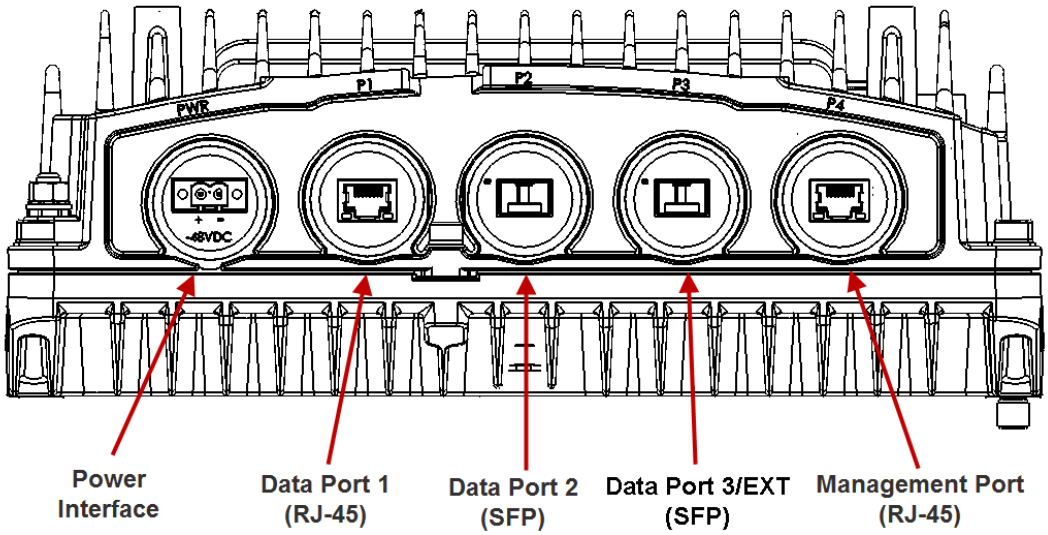


- Power Interface (-48V)
- Data Port 1 for GbE traffic:
  - Electric 10/100/1000Base-T (RJ-45)
- Data Port 2 for GbE traffic:
  - Optical 1000Base-X (SFP)
- Data Port 3/EXT
  - Optical: 1000Base-X (SFP)
  - Optical: MIMO port for data sharing.
- Management and Protection
  - Electric 10/100Base-T (RJ-45)
- 2 RF Interfaces – Standard interface per frequency band
- RSL interface: Dual-pin connector
- Source sharing: TNC connector
- Grounding screw

# System Components – Diplexer-Based Branching

**Note**

Refer to the product roadmap for availability of PTP 820C HP in a specific band, as well as the availability of any specific mediation device.

Presenting a specific component in this manual does not indicate that it is available for ordering. Please consult with your pre-sales engineer for specific component availability information.

## Diplexer-Based Branching – Radio Components

Figure 4 PTP 820C HP Radio Unit

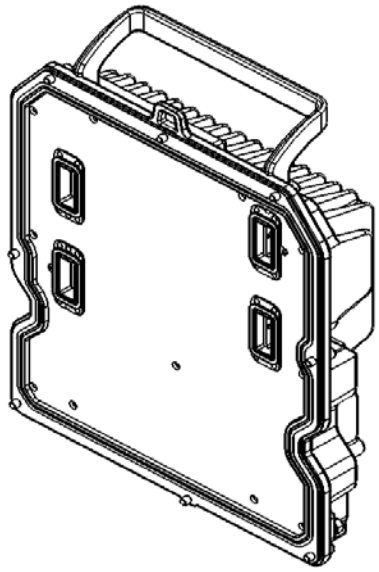

Figure 5 PTP 820C HP Diplexer Unit

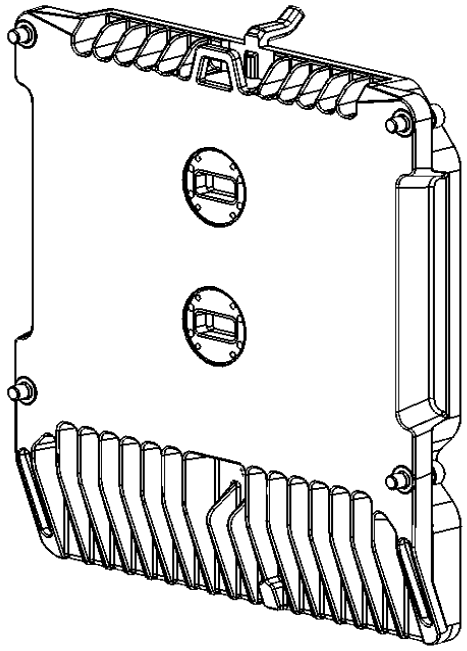

# Diplexer-Based Branching – Branching Components

Figure 6 OMT

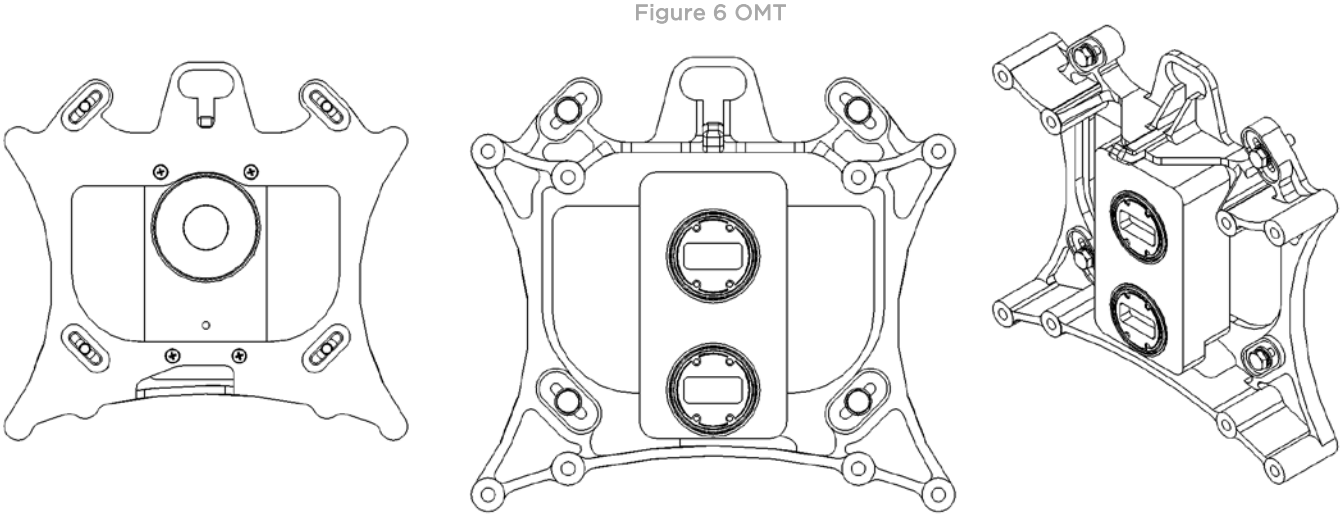

Figure 7 Space Diversity Branching Device

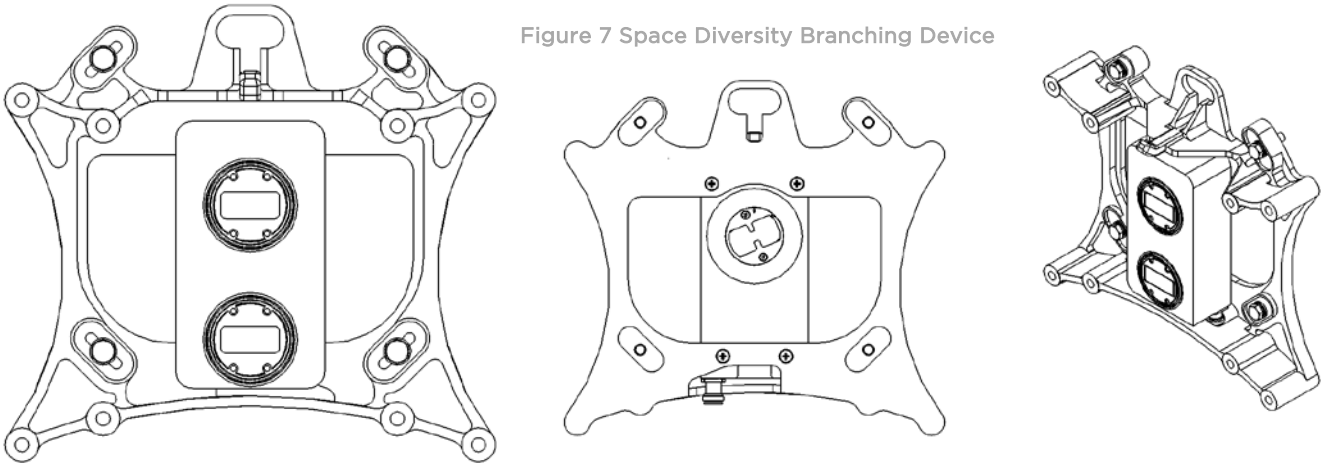

Figure 8 Splitter

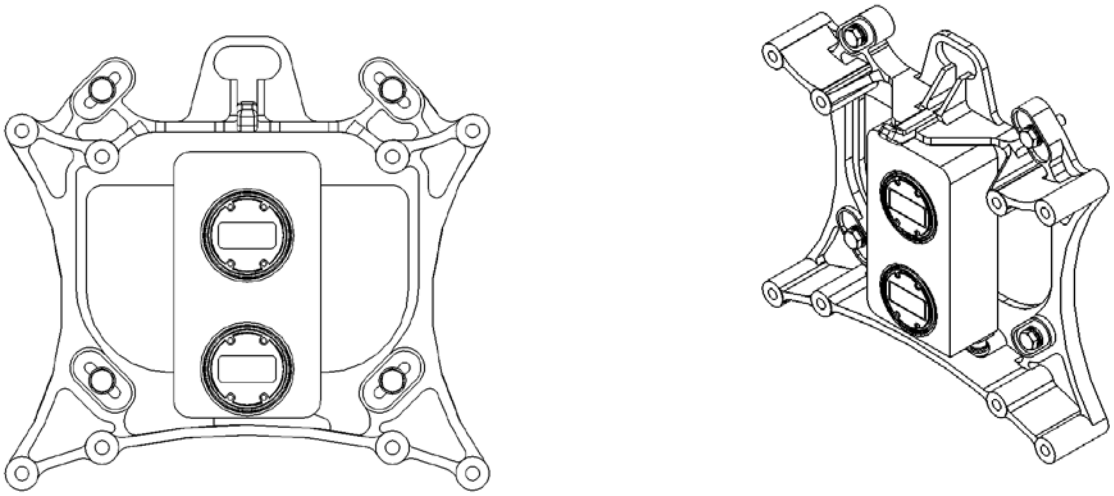

Figure 9 Dual Coupler/Splitter/Circulator

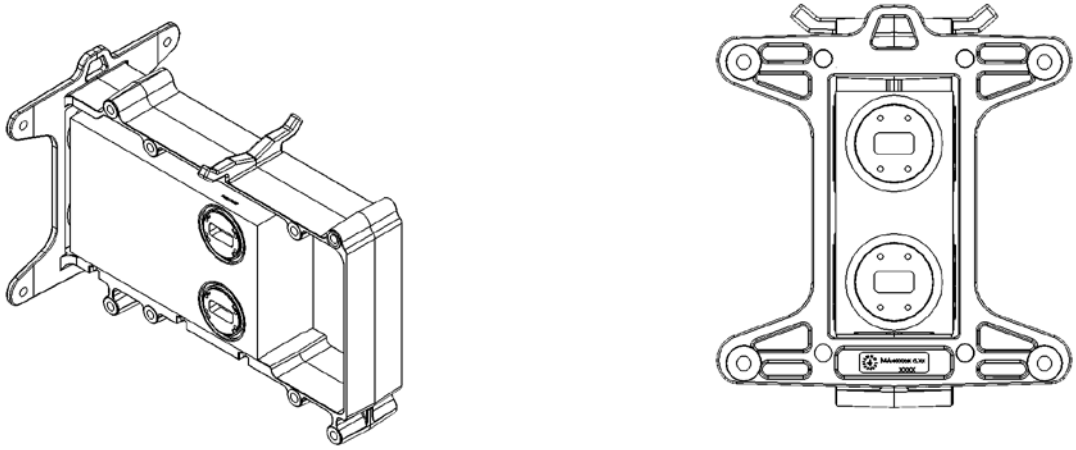

# Diplexer-Based Branching – Accessory Components

Figure 10 Remote Pole Mount

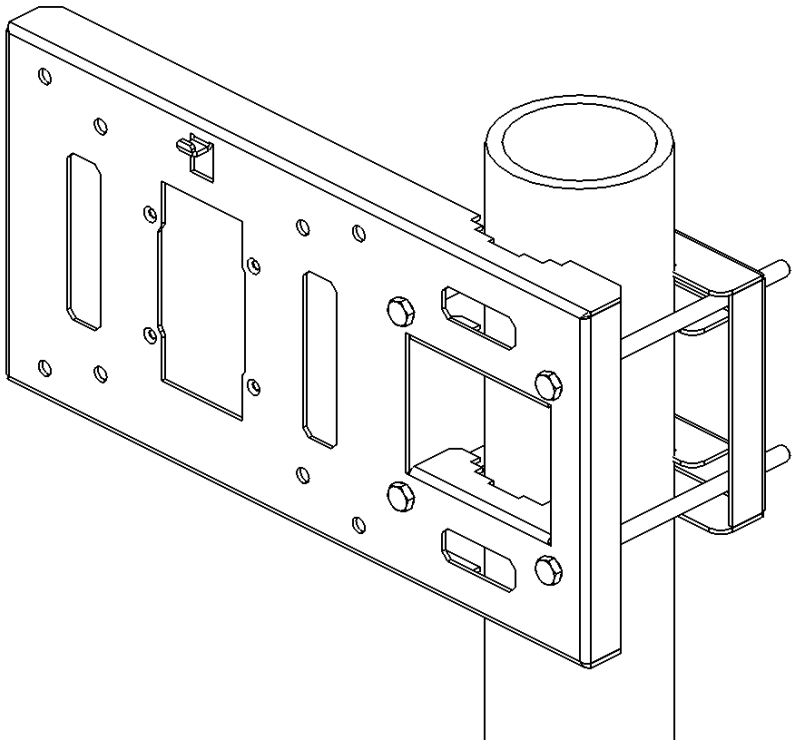

Figure 11 Remote Pole Mount Adaptor

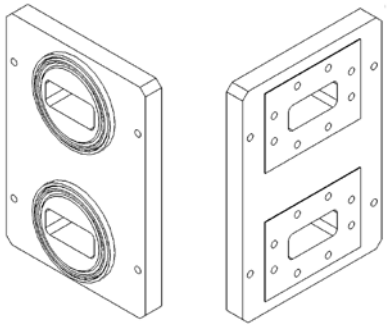

# System Components – Channel Filter-Based Branching

**Note**

Refer to the product roadmap for availability of PTP 820C HP in a specific band, as well as the availability of any specific mediation device.

Presenting a specific component in this manual does not indicate that it is available for ordering. Please consult with your pre-sales engineer for specific component availability information.

Figure 12 PTP 820C HP OCU Unit

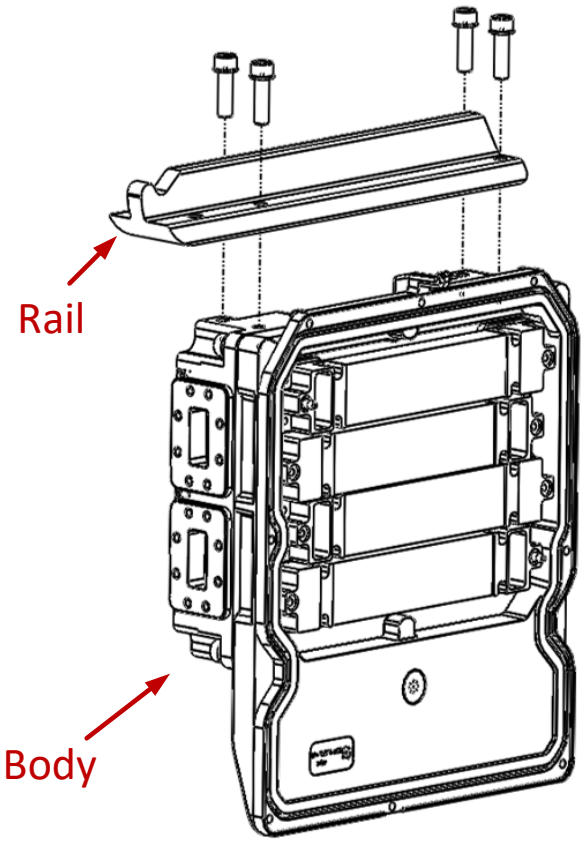


Figure 13 PTP 820C HP Branching Pole Profile (Part of PTP 820C HP Filters Remote Mount Kit)

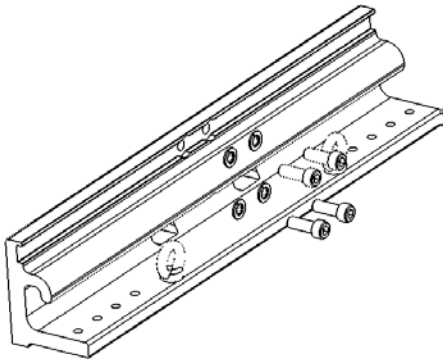

Figure 14: Short U-Bend

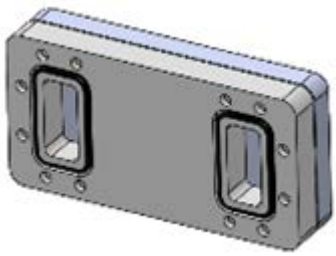

Figure 15: Long U-Bend

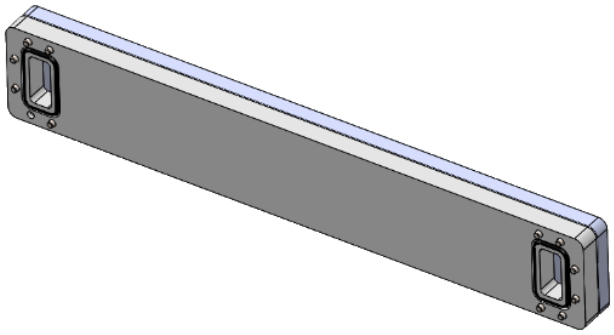

Figure 16: Splitter/Coupler

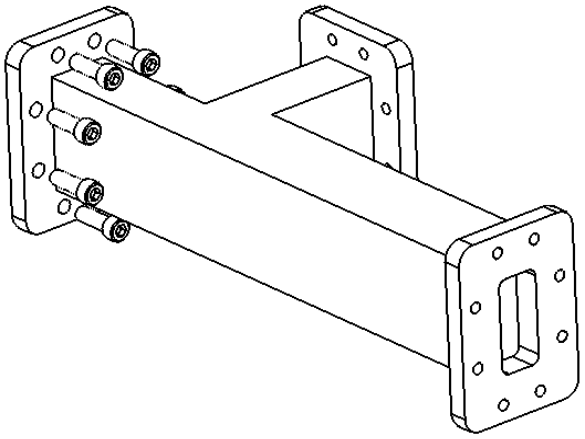

Figure 17: Termination

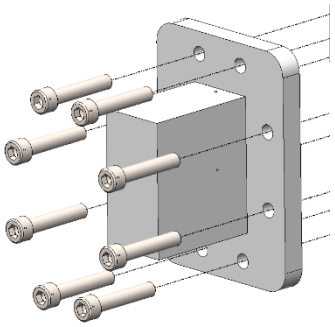

Figure 18 Radio Unit and Diplexer Unit

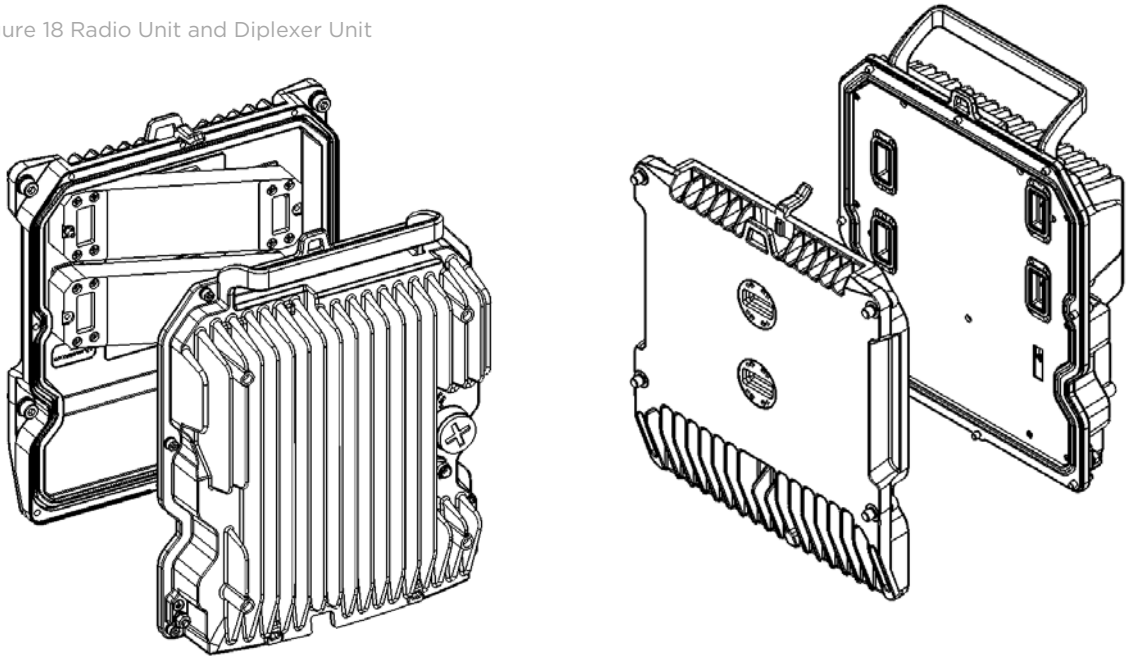

In PTP 820C HP, Port 1 is the upper port, located closest to the handle, and Port 2 is the lower port, located closest to the Ethernet ports.

# PTP 820C HP Models

**Note**

Refer to the product roadmap for availability of PTP 820C HP in a specific band, as well as the availability of any specific mediation device.

Presenting a specific component in this manual does not indicate that it is available for ordering. Please consult with your pre-sales engineer for specific component availability information.

## Models for Radio Unit

Table 1 defines the radio unit Model placeholders.

Table 1: PTP 820C HP Radio Unit Model Placeholders

| P/N | Description | Notes |
|---|---|---|
| C060082B219A | PTP 820C-HP, Basic Radio,6 GHz | Eth + SFP + MIMO Port |
| C070082B324A | PTP 820C-HP, Basic Radio,7 GHz | Eth + SFP + MIMO Port |
| C080082B174A | PTP 820C-HP, Basic Radio,8 GHz | Eth + SFP + MIMO Port |
| C110082B128A | PTP 820C-HP, Basic Radio,11 GHz | Eth + SFP + MIMO Port |
| C060082B220A | PTP 820C-HP, Basic Radio, 6 GHz, ESS | Eth + SFP + SFP |
| C110082B129A | PTP 820C-HP, Basic Radio, 11 GHz, ESS | Eth + SFP + SFP |
| C070082B325A | PTP 820C-HP, Basic Radio, 7 GHz, ESS | Eth + SFP + SFP |
| C080082B175A | PTP 820C-HP, Basic Radio, 8 GHz, ESS | Eth + SFP + SFP |

## Models for Diplexer Unit

Table 2 defines the radio unit Model placeholders.

Table 2: PTP 820C HP Diplexer Unit Model Placeholders

| P/N | Description |
|---|---|
| N060082L218A | PTP 820C-HP/RFU-D-HP, Diplexer,L6 GHz, TR 252A, CH1W4, Hi,6179.415-6304.015MHz |
| N060082L219A | PTP 820C-HP/RFU-D-HP, Diplexer,L6 GHz, TR 252A, CH1W4, Lo,5927.375-6051.975MHz |
| N060082L229A | PTP 820C-HP/RFU-D-HP, Diplexer,L6 GHz, TR 252A, CH3W6, Hi,6238.715-6363.315MHz |
| N060082L230A | PTP 820C-HP/RFU-D-HP, Diplexer,L6 GHz, TR 252A, CH3W6, Lo,5986.675-6111.275MHz |
| N060082L220A | PTP 820C-HP/RFU-D-HP, Diplexer,L6 GHz, TR 252A, CH5W8, Hi,6298.015-6422.615MHz |
| N060082L221A | PTP 820C-HP/RFU-D-HP, Diplexer,L6 GHz, TR 252A, CH5W8, Lo,6045.975-6170.575MHz |
| N060082L238A | PTP 820C-HP/RFU-D-HP, Diplexer,U6 GHz, TR160A,Ch1W6,Hi,6707.5-6772.5MHz |
| N060082L239A | PTP 820C-HP/RFU-D-HP, Diplexer,U6 GHz, TR160A,Ch1W6,Lo,6537.5-6612.5MHz |
| N060082L240A | PTP 820C-HP/RFU-D-HP, Diplexer,U6 GHz,TR160A,Ch7W12,Hi,6767.5-6832.5MHz |
| N060082L241A | PTP 820C-HP/RFU-D-HP, Diplexer,U6 GHz,TR160A,Ch7W12,Lo,6607.5-6672.5MHz |
| N060082L242A | PTP 820C-HP/RFU-D-HP, Diplexer,U6 GHz,TR160A,Ch13W16,Hi,6827.5-6872.5MHz |
| N060082L243A | PTP 820C-HP/RFU-D-HP, Diplexer,U6 GHz,TR160A,Ch13W16,Lo,6667.5-6712.5MHz |
| N060082L222A | PTP 820C-HP/RFU-D-HP, Diplexer,U6 GHz, TR 340A, CH1W4, Hi,6781-6939MHz |
| N060082L223A | PTP 820C-HP/RFU-D-HP, Diplexer,U6 GHz, TR 340A, CH1W4, Lo,6441-6599MHz |
| N060082L224A | PTP 820C-HP/RFU-D-HP, Diplexer,U6 GHz, TR 340A, CH5W8, Hi,6941-7099MHz |
| N060082L225A | PTP 820C-HP/RFU-D-HP, Diplexer,U6 GHz, TR 340A, CH5W8, Lo,6601-6759MHz |
| N060082L245A | PTP 820C-HP/RFU-D-HP, Diplexer,U6 GHz, TR 340D, CH7W11, Hi,6965-7115MHz |
| N060082L246A | PTP 820C-HP/RFU-D-HP, Diplexer,U6 GHz, TR 340D, CH7W11, Lo,6625-6775MHz |
| N110082L127A | PTP 820C-HP/RFU-D-HP, Diplexer,11 GHz, TR 500, CH1W6, Hi,11185-11485MHz |
| N110082L128A | PTP 820C-HP/RFU-D-HP, Diplexer,11 GHz, TR 500, CH1W6, Lo,10695-10955MHz |
| N110082L129A | PTP 820C-HP/RFU-D-HP, Diplexer,11 GHz, TR 500, CH2W7, Hi,11225-11485MHz |
| N110082L130A | PTP 820C-HP/RFU-D-HP, Diplexer,11 GHz, TR 500, CH2W7, Lo,10735-10995MHz |
| N110082L131A | PTP 820C-HP/RFU-D-HP, Diplexer,11 GHz, TR 500, CH3W8, Hi,11265-11525MHz |

| | |
|---|---|
| N110082L132A | PTP 820C-HP/RFU-D-HP, Diplexer,11 GHz, TR 500, CH3W8, Lo,10775-11035MHz |
| N110082L133A | PTP 820C-HP/RFU-D-HP, Diplexer,11 GHz, TR 500, CH4W9, Hi,11305-11585MHz |
| N110082L134A | PTP 820C-HP/RFU-D-HP, Diplexer,11 GHz, TR 500, CH4W9, Lo,10815-11095MHz |
| N110082L135A | PTP 820C-HP/RFU-D-HP, Diplexer,11 GHz, TR 500, CH5W10, Hi,11345-11605MHz |
| N110082L136A | PTP 820C-HP/RFU-D-HP, Diplexer,11 GHz, TR 500, CH5W10, Lo,10855-11115MHz |
| N110082L137A | PTP 820C-HP/RFU-D-HP, Diplexer,11 GHz, TR 500, CH6W12, Hi,11385-11705MHz |
| N110082L138A | PTP 820C-HP/RFU-D-HP, Diplexer,11 GHz, TR 500, CH6W12, Lo,10895-11205MHz |
| N110082L139A | PTP 820C-HP/RFU-D-HP, Diplexer,11 GHz, TR 500, CH7W13, Hi,11425-11725MHz |
| N110082L140A | PTP 820C-HP/RFU-D-HP, Diplexer,11 GHz, TR 500, CH7W13, Lo,10915-11207MHz |
| N070082L326A | PTP 820C-HP/RFU-D-HP, Diplexer,7 GHz, TR 154A, CH1W2, Hi,7580.5-7639.5MHz |
| N070082L327A | PTP 820C-HP/RFU-D-HP, Diplexer,7 GHz, TR 154A, CH1W2, Lo,7426.5-7485.5MHz |
| N070082L328A | PTP 820C-HP/RFU-D-HP, Diplexer,7 GHz, TR 154A, CH2W3, Hi,7608.5-7667.5MHz |
| N070082L329A | PTP 820C-HP/RFU-D-HP, Diplexer,7 GHz, TR 154A, CH2W3, Lo,7454.5-7513.5MHz |
| N070082L330A | PTP 820C-HP/RFU-D-HP, Diplexer,7 GHz, TR 154A, CH3W4, Hi,7636.5-7695.5MHz |
| N070082L331A | PTP 820C-HP/RFU-D-HP, Diplexer,7 GHz, TR 154A, CH3W4, Lo,7482.5-7541.5MHz |
| N070082L332A | PTP 820C-HP/RFU-D-HP, Diplexer,7 GHz, TR 154A, CH4W5, Hi,7664.5-7723.5MHz |
| N070082L333A | PTP 820C-HP/RFU-D-HP, Diplexer,7 GHz, TR 154A, CH4W5, Lo,7510.5-7569.5MHz |
| N070082L334A | PTP 820C-HP/RFU-D-HP, Diplexer,7 GHz, TR 161A, CH1W2, Hi,7284-7343MHz |
| N070082L335A | PTP 820C-HP/RFU-D-HP, Diplexer,7 GHz, TR 161A, CH1W2, Lo,7123-7182MHz |
| N070082L336A | PTP 820C-HP/RFU-D-HP, Diplexer,7 GHz, TR 161A, CH3W4, Hi,7340-7399MHz |
| N070082L337A | PTP 820C-HP/RFU-D-HP, Diplexer,7 GHz, TR 161A, CH3W4, Lo,7179-7238MHz |
| N080082L176A | PTP 820C-HP/RFU-D-HP, Diplexer,8 GHz, TR 311A, CH1W4, Hi,8043.52-8163.47MHz |
| N080082L177A | PTP 820C-HP/RFU-D-HP, Diplexer,8 GHz, TR 311A, CH1W4, Lo,7732.2-7852.15MHz |
| N080082L178A | PTP 820C-HP/RFU-D-HP, Diplexer,8 GHz, TR 311A, CH5W8, Hi,8162.12-8282.07MHz |
| N080082L179A | PTP 820C-HP/RFU-D-HP, Diplexer,8 GHz, TR 311A, CH5W8, Lo,7850.8-7970.75MHz |

## Models for Mediation Devices in Diplexer-Based Branching

Table 3: Models for Mediation Devices (Diplexer-Based Branching)

| P/N | Description |
|---|---|
| N000082L166A | PTP 820C-HP/RFU-D-HP Remote Mount kit |
| N060082L231A | PTP 820C-HP/RFU-D-HP Remote Mount Adaptor,6 GHz |
| N110082L144A | PTP 820C-HP/RFU-D-HP Remote Mount Adaptor,11 GHz |
| N070082L338A | PTP 820C-HP/RFU-D-HP Remote Mount Adaptor,7-8 GHz |
| N060082L232A | PTP 820C-HP/RFU-D-HP Splitter,6 GHz |
| N110082L145A | PTP 820C-HP/RFU-D-HP Splitter,11 GHz |
| N070082L339A | PTP 820C-HP/RFU-D-HP Splitter,7-8 GHz |
| N060082L226A | PTP 820C-HP/RFU-D-HP OMT,6 GHz |
| N070082L340A | PTP 820C-HP/RFU-D-HP OMT,7-8 GHz |
| N110082L141A | PTP 820C-HP/RFU-D-HP OMT,11 GHz |
| N060082L244A | PTP 820C-HP/RFU-D-HP OMT Plate Adaptor, 6 GHz |
| N110082L148A | PTP 820C-HP/RFU-D-HP OMT Plate Adaptor, 11 GHz |
| N070082L341A | PTP 820C-HP/RFU-D-HP OMT Plate Adaptor, 7-8 GHz |
| N060082L227A | PTP 820C-HP/RFU-D-HP Dual Coupler,6 GHz |
| N110082L142A | PTP 820C-HP/RFU-D-HP Dual Coupler,11 GHz |
| N070082L342A | PTP 820C-HP/RFU-D-HP Dual Coupler,7-8 GHz |
| N060082L228A | PTP 820C-HP/RFU-D-HP Dual Splitter,6 GHz |
| N110082L143A | PTP 820C-HP/RFU-D-HP Dual Splitter,11 GHz |
| N070082L343A | PTP 820C-HP/RFU-D-HP Dual Splitter,7-8 GHz |
| N060082L233A | PTP 820C-HP/RFU-D-HP Dual Circulator,6 GHz |
| N110082L146A | PTP 820C-HP/RFU-D-HP Dual Circulator,11 GHz |
| N070082L344A | PTP 820C-HP/RFU-D-HP Dual Circulator,7-8 GHz |
| N060082L234A | PTP 820C-HP/RFU-D-HP Space Diversity Kit,6 GHz |

| | |
|---|---|
| N110082L147A | PTP 820C-HP/RFU-D-HP Space Diversity Kit,11 GHz |
| N070082L345A | PTP 820C-HP/RFU-D-HP Space Diversity Kit,7-8 GHz |

## Models for Mediation Devices in Channel Filter-Based Branching

The following is a list of PTP 820C HP Channel Filter Branching units. These Branching units are used to build various PTP 820C HP configurations. Since the SKU is frequency dependent, please check with Cambium Sales Reprsenttive for P/N.

Table 4: PTP 820C HP Branching Unit Marketing Models

| Description |
|---|
| PTP 820C HP OCU Mounting Kit |
| PTP 820C HP Filters Cover Branching U Bend, ff GHz |
| PTP 820C HP FLT Cover Branch. Long U Bend, ff GHz |
| PTP 820C HP PDR100/CPR90G WG 50ohm termination kit, ff GHz |
| PTP 820C HP Filters Cover Branching Splitter MD Unit, ff GHz |
| PTP 820C HP Filters Cover Branching Coupler MD Unit, ff GHz |

In these Models, ff represents the frequency. Possible values are: 06, 7-8, and 11.

# Adaptors and Installation Kits

Table 5: Adaptors and Installation Kits

| Description | 6 GHz | 7/8 GHz | 11 GHz |
|---|---|---|---|
| DUAL COUPLER KIT | N060082L227A | N070082L342A | N110082L142A |
| DUAL SPLITTER KIT | N060082L228A | N070082L343A | N110082L143A |
| DUAL CIRCULATOR KIT | N060082L233A | N070082L344A | N110082L146A |
| SPLITTER KIT | N060082L232A | N070082L339A | N110082L145A |
| OMT KIT | N060082L226A | N070082L340A | N110082L141A |
| SPACE DIVERSITY KIT | N060082L234A | N070082L345A | N110082L147A |
| REMOTE MOUNT KIT | N000082L166A | N000082L166A | N000082L166A |
| OMT PLATE ADAPTOR | N060082L244A | N070082L341A | N110082L148A |
| WG Kit | N060082L156A | N070082L004A | N110082L105A |

Table 6: Antenna Circ. Adapters for OMT

| Antenna Circ. Adapters for OMT | 6GHz | 7/8 GHz | 11GHz |
|---|---|---|---|
| CommScope | N060082L147A | N070082L303A | N110082L092A |
| Radio Waves | N060082L154A | N070082L310A | N110082L103A |

## Antenna Connection

PTP 820C HP can be mounted directly for 6 to 11 GHz using the following antenna types (for integrated antennas, specific antennas are required):

- CommScope: VHLP series
- Radiowave: HP series

For remote mount installations, the following Flexible Waveguide flanges should be used (millimetric). The same antenna type (integrated) as indicated above can be used (recommended).

Other antenna types using the flanges listed in the table below may also be used.

Table 7: Antenna Flanges

| Frequency Band | Range (GHz) | Rect. WG Flange Des. | Radio Side (Remote) Flange Des. |
|---|---|---|---|
| 6(L/U) GHz | 5.8-7.1 | WR137 | UDR701 |
| 7/8 GHz | 7.1-8.5 | WR112 | UBR84[1] |
| 10/11 GHz | 10.0-11.7 | WR90 | UBR100[1] |

If a different antenna type (CPR flange) is used, a flange adaptor is required. Please contact your Cambium sales representative for details.

**Note**

Appropriate lubricant or grease can be applied to the screws that connect the PTP 820C HP to the antenna interface.

[1] There is no direct WG connection. An adaptor is required to connect the RFU to the WG.

# Power Specifications

## Electrical Requirements

- -48V DC Nominal
- Maximum current rating 4A
- Maximum Cable length 300 meter

## Power Connection Options

| Power Source and Range | Data Connection Type | Connection Length | DC Cable Type / Gage |
|---|---|---|---|
| External DC<br>-(40.5 ÷ 60) VDC | Optical | ≤ 328ft | 14AWG |
| | Optical | 328ft ÷ 984ft | 10AWG |
| | Electrical | ≤ 328ft | 14AWG |

Table 8: Power connection options part numbers

| Part Number | Description |
|---|---|
| N000082L169A | PTP 820 Outdoor_DC_cbl_2x14AWG_drum, 305m |
| N000082L170A | PTP 820 Outdoor_DC_cbl_2x10AWG_drum, 305m |

## Important Notes!

- The unit must only be installed by service personnel.
- The unit must have a permanent connection to protective grounding.
- Data port 2, Data port 3, the Management port, and the TNC connector do not provide protection from over-voltages on telecommunication networks for host equipment users.
- The RSL interface connector is intended for technician use only.
- The disconnect device (circuit breaker) in the building installation:
- Shall be readily accessible and incorporated external to the equipment.
- The maximum rating of the overcurrent protection shall be up to 6 Amp.

# Environmental Specifications

Operating: ETSI EN 300 019-1-4 Class 4.1

Temperature range for continuous operating temperature with high reliability:
**-33°C (-27°F) to +55°C (131°F)**

Temperature range for exceptional temperatures; tested successfully, with limited margins:
**-45°C (-49°F) to +60°C (140°F)**

Humidity: 5%RH to 100%RH
IEC529 IP66

Storage: ETSI EN 300 019-1-1 Class 1.2

Transportation: ETSI EN 300 019-1-2 Class 2.3

# Chapter 3: Grounding the PTP 820C HP Unit

## List of Items

Table 9: Grounding Cable

| P/N | Marketing Description | Quantity |
|---|---|---|
| N000082L116A | PTP 820 GROUND CABLE FOR IDU and ODU | 1 |

## Required Tools

- Metric offset wrench key wrench #3
- Metric wrench 10mm

## Procedure

1 On the front of each PTP 820C HP unit, loosen the nut, plain washer, and serrated washer from the GND stud, using the metric offset hexagon key and the wrench.

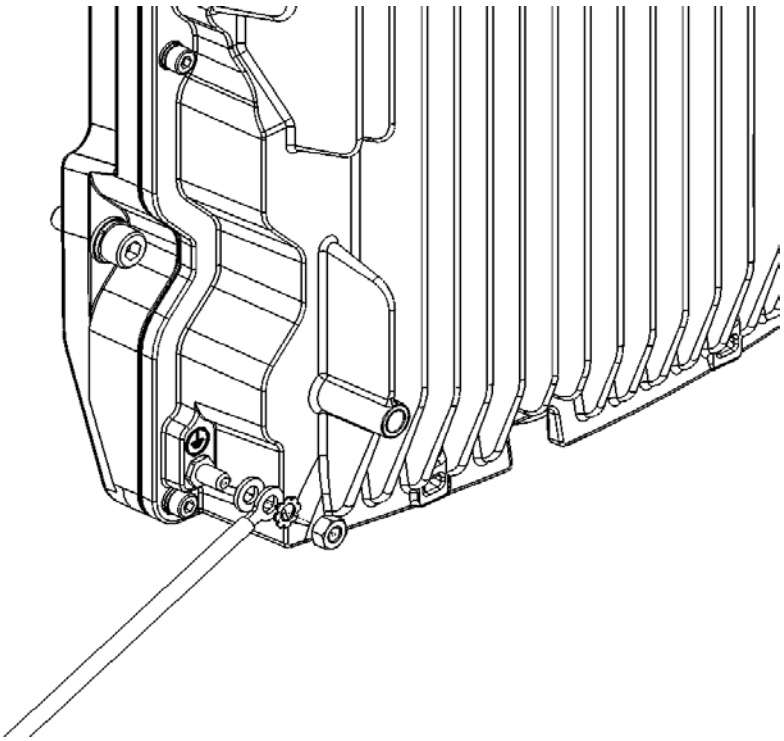

2 Place the cable lug (supplied with the PTP 820C HP grounding kit) in place on the screw.
3 Secure the cable lug.
4 The second side of the GND cable should be connected to the main ground bar or terminal ground bar of the site.
5 Perform a resistance test between the 2 lugs of the GND cable. Verify that the result is 0-2 ohms.

**Notes**

The unit's earthing screw terminal shall be permanently connected to protective earth in a building installation in accordance with applicable national code and regulations by a service person.

Any outdoor antenna cable shield shall be permanently connected to protective earth in a building installation.

# Chapter 4: Cable Installation and Grounding

This chapter describes the PTP 820C HP cable installation and grounding procedure.

This chapter includes:


- Minimum and Maximum Cable Diameter
- Cable Grounding
- Surge Protection
- Available Cable Options
- Securing the Cables
- Special Instructions for use of Glands
- Connecting an Optical Fiber Cable and SFP
- Connecting a DC Power Cable
- Connecting the Ethernet Cable
- Management Connection for 1+1/2+2 HSB Configurations

# Minimum and Maximum Cable Diameter

To fit the gland, the outer cable diameter should be between 6-10 mm. This applies to all glands on both the PTP 820C HP unit and the PoE Injector.

To fit the grounding clamp, the outer diameter of CAT5E Ethernet Cables must be between 6-7.1mm.

# Cable Grounding

Cables must be grounded as follows:

- For fiber cables (see Connecting an Optical Fiber Cable and SFP), no grounding is required.
- For DC power cables (see connecting a DC power cable), no grounding is required.
- For Ethernet cables, the shielded Ethernetcable (SF/UTP construction) must be grounded to the antenna tower at the top (next to the PTP 820 unit) and the indoor cabinet and every 50m using the Ethernet Cable Grounding Kit N000082L017A.

Figure 19 Grounding cable

## To Connect the Grounding kit

Table 10: Cable Grounding Kit

| P/N | Description |
|---|---|
| N000082L017A | PTP 820 Grounding Kit for CAT5e F/UTP 8mm cable |

### Procedure

1 Strip the Cable jacket.

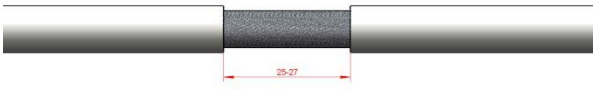


2 Place the cable in the middle of the grounding bracket.

3 Close the grounding bracket around the cable.

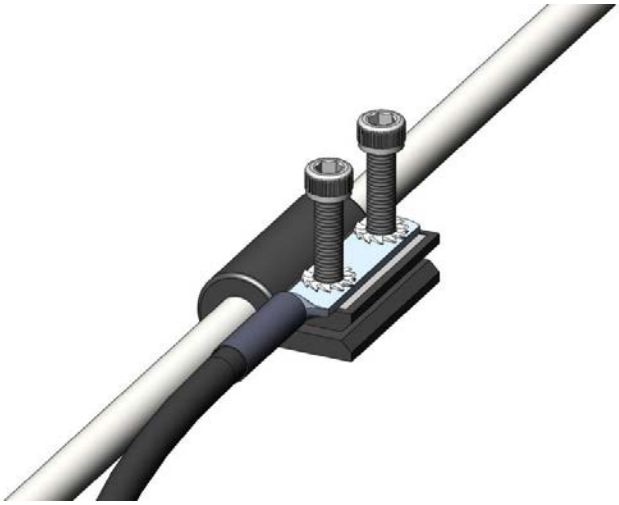

4 Tighten the two screws to secure the grounding bracket around the cable.

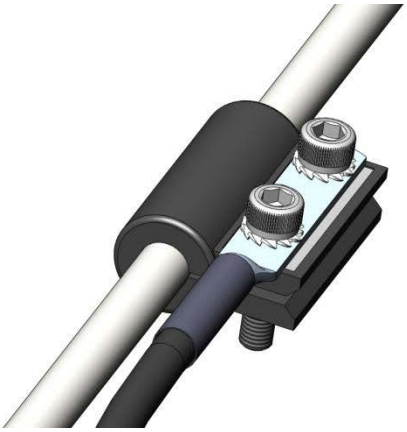

5 Install the grounding lug on the grounding bar, or directly to the tower.

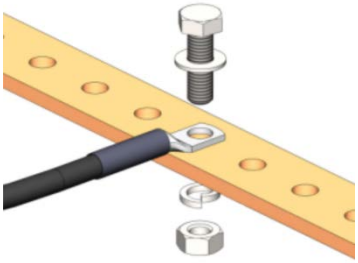

6 Tighten the grounding lug

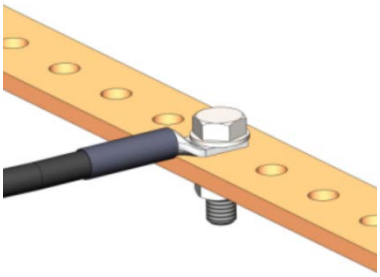

## Power Source

The Power cable must be plugged into the unit before turning on the external power.

When selecting a power source, the following must be considered:

DC power can be from -40 VDC to -60 VDC.

| | |
|---|---|
| | **Warning**<br>Availability of a UPS (Uninterrupted Power Source), battery backup and emergency power generator is desirable.<br>The power supply must have grounding points on the AC and DC sides. |
| | **Caution**<br>The user power supply GND must be connected to the positive pole in the PTP 820C HP power supply.<br>Any other connection may cause damage to the system. |
| | **Note**<br>For the warranty to be honored, you must install the PTP 820C HP in accordance with the instructions above. |

# Surge Protection

PTP 820C HP includes built-in surge protection for its Ethernet and power interfaces. PTP 820C HP's surge protection implementation complies with the standards set forth in the Surge Protection Requirements section of the PTP 820C HP Technical Description, provided the Ethernet cables were prepared according to the instructions in Connecting the Ethernet Cable.

In areas in which severe lighting conditions are likely to occur, it is strongly recommended to add additional protection by placing lightning protectors on all electrical Ethernet cables, near the connection points with the PTP 820C HP unit.

# Available Cable Options

## Fiber Optic Cables - Single Mode

Table 11: Fiber Optic Cables - Single Mode part numbers

| Part Number | Description |
|---|---|
| N000082L139A | PTP 820 Optical CABLE, SM, 30m |
| N000082L140A | PTP 820 Optical CABLE, SM, 50m |
| N000082L141A | PTP 820 Optical CABLE, SM, 80m |
| N000082L142A | PTP 820 Optical CABLE, SM, 100m |
| N000082L143A | PTP 820 Optical CABLE, SM, 150m |

## Fiber Optic Cables - Multi Mode

Table 12: Fiber Optic Cables - Multi Mode

| Part Number | Description |
|---|---|
| N000082L019A | PTP 820 Outdoor_DC_cbl_2x18AWG_drum, 305m |
| N000082L065A | PTP 820 DC Connnector |

## DC Cable and Connector

Table 13: DC cable and connector

| Part Number | Description |
|---|---|
| N000082L019A | PTP 820 Outdoor_DC_cbl_2x18AWG_drum |
| N000082L065A | PTP 820 DC Connnector |

## Cables for MIMO Connections

Table 14: Cables for MIMO Connections

| Part Number | Description |
|---|---|
| N000082L063A | PTP 820 C, CABLE, SFP,4x4MIMO_DATA_SHARING_KIT_10M |
| N000082L138A | PTP 820 C, CABLE, SFP,4x4MIMO_DATA_SHARING_KIT_20M |
| N000082L064A | PTP 820 C, SOURCE_SHARING_10M |
| N000082L137A | PTP 820 C, SOURCE_SHARING_20M |
| N000082L060A | PTP 820 C MIMO or Prot management cable 10m |
| N000082L136A | PTP 820 C MIMO or Prot management cable 20m |

## Ethernet Cable and Specifications

Table 15: Ehternet cable

| Part Number | Description |
|---|---|
| N000082L016A | PTP 820 CAT5E Outdoor 100m drum |

This cable is suitable for:

- Fast Ethernet
- Gigabit Ethernet

The following figure shows the cable design. The numbers in the figure refer to the items listed beneath the figure.

Figure 20 Cable design

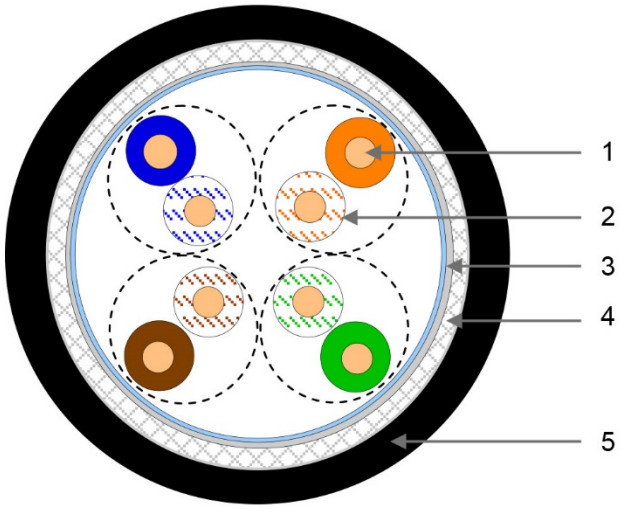


- [1] Conductor
- [2] Insulation
- [3] Screen: Alu/Pet foil. Alu outside
- [4] Tinned copper braid
- [5] Jacket

Table 16: Ethernet cable Color Code

| Pair | Wire A | Wire B |
|---|---|---|
| 1 | WHITE-blue | BLUE |
| 2 | WHITE-orange | ORANGE |
| 3 | WHITE-green | GREEN |
| 4 | WHITE-brown | BROWN |

# Outdoor Ethernet Cable Specifications

Table 17: Ethernet Cable Electrical Requirements

| Electrical Requirements | |
|---|---|
| Cable type | CAT-5e SFUTP, 4 pairs, according to ANSI/TIA/EIA-568-B-2 |
| Wire gauge | 24 AWG |
| Stranding | Solid |
| Voltage rating | 70V |
| Shielding | Braid + Foil |
| Pinout | 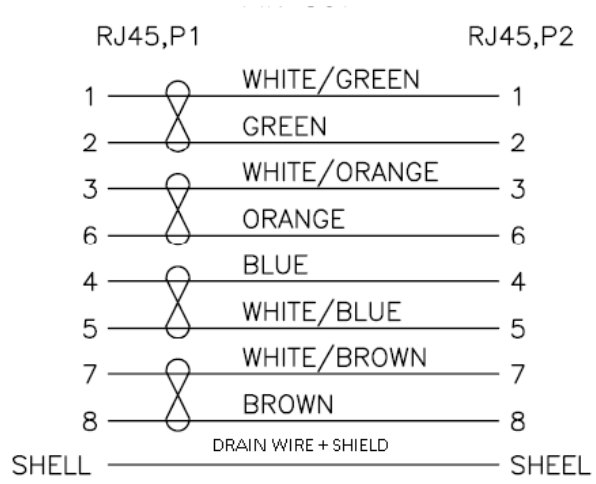 |
| **Ethernet Cable Mechanical/ Environmental Requirements** | |
| Jacket | PVC, double, UV resistant |
| Outer diameter | 7.1mm (in order to be compatible with the grounding clamp, CAT5E gnd kit) |
| Operating and Storage temperature range | -40°C - 85°C |
| Flammability rating | According to UL-1581 VW1, IEC 60332-1 |
| RoHS | According to Directive/2002/95/EC |

# Outdoor DC Cable Specifications

Table 18: Outdoor DC Cable Electrical Requirements

| Electrical Requirements | |
|---|---|
| Cable type | 2 tinned copper wires |

| | |
|---|---|
| Wire gauge | 14 AWG (for <328ft installations)<br>9 AWG (for >328ft installations) |
| Stranding | stranded |
| Voltage rating | 600V for 9 AWG<br>300V for 14 AWG |
| Spark test | 4KV |
| Dielectric strength | 2KV AC min |
| **Mechanical/ Environmental Requirements** | |
| Jacket | PVC, double, UV resistant |
| Outer diameter | 6-10.5 mm |
| Operating & Storage temperature range | -40°C - 85°C |
| Flammability rating | According to UL-1581 VW1, IEC 60332-1 |
| RoHS | According to Directive/2002/95/EC |

# Securing the Cables

All cables should be secured at every meter on-site using either a T-Rups kit, Model “Outdoor Ties”, or cable clamps. When using the T-Rups kit, take special care to apply the proper amount of force in order to avoid damage to the cable. This is especially important for optical (SFP) cables.

# Special Instructions for use of Glands

**Note**

Each PTP 820C HP unit is supplied with two glands. If additional glands are required, they must be ordered separately, in kits of five glands each.

Table 19: Glands kit

| Part Number | Description |
|---|---|
| N000082L014A | PTP 820 Glands_x5_KIT |

In order to remove the plastic plugs for the unit, you can use the flange of supplied glands to disconnect them. See the figures below:

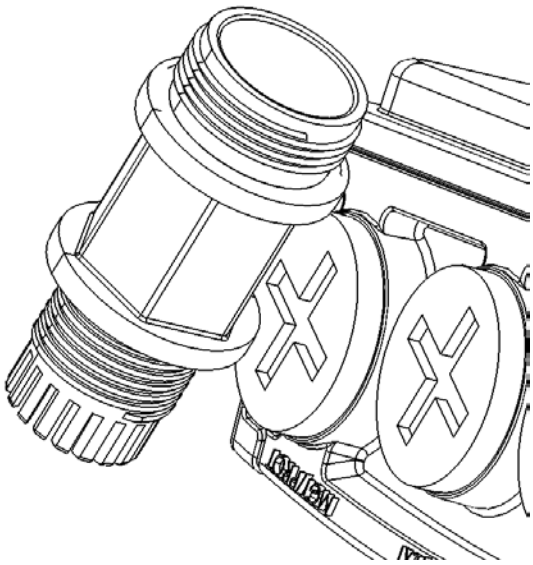

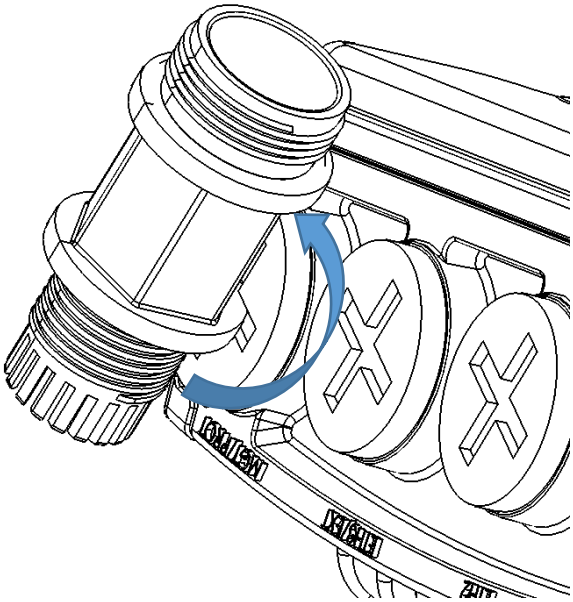

## General Installation Procedure

This procedure applies to all cable types and explains how to install the cables using long glands. The gland is supplied assembled.

1 Before inserting a cable, you must disassemble the gland cap and gland rubber from the gland body.

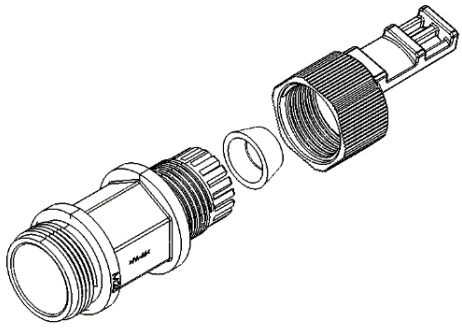

2 Slide the gland cap into the cable.

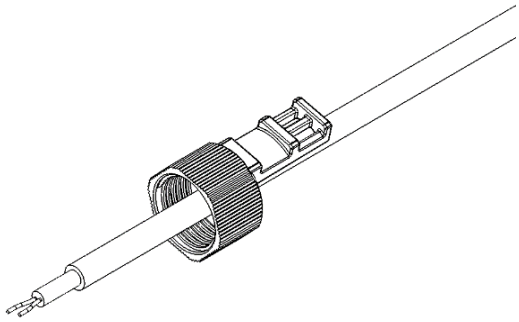

3 Slide the gland rubber into the cable.

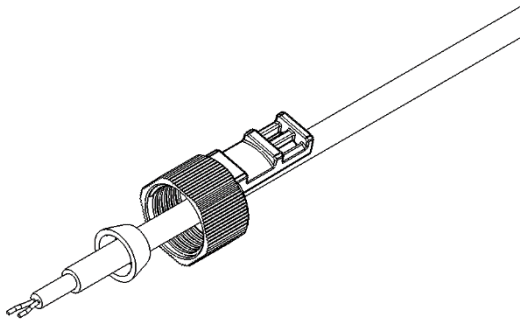

4 Slide the cable into the body of the gland. If a gland cap is being used (see Step 5), make sure to leave enough space for the gland cap to fit into the gland without disturbing the cable.

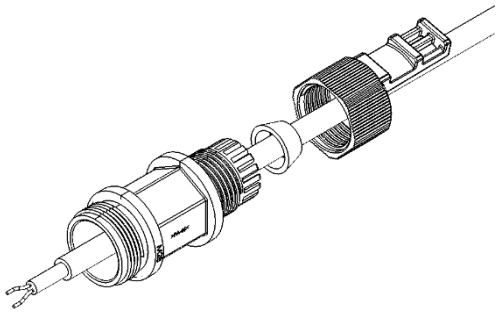

5 Optionally, after securing the cable into the body of the gland, close the other side of the gland with an M28 gland cap. The gland cap protects the cable and connector from damage when elevating the cable and gland to the radio unit.

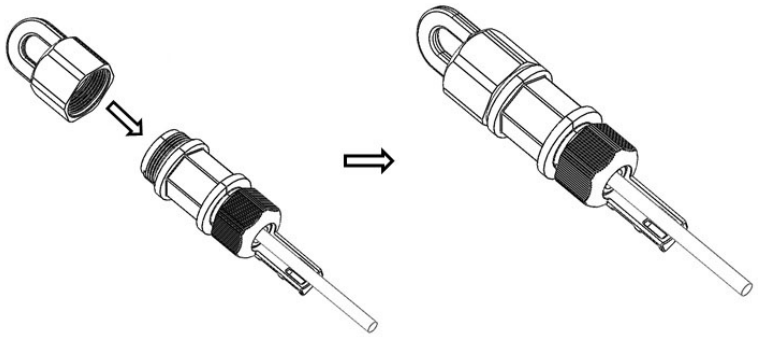

6 The M28 gland cap has hook on top. After attaching the gland cap to the gland, connect a rope to the hook and use this to lift the gland and cable up to the radio unit. Before securing the gland into the radio unit, remove the gland cap.

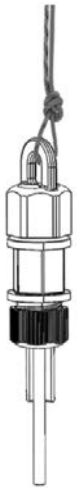

7 If an M28 gland cap is used to close the gland when raising the gland and cable to the radio unit, remove the gland cap from the gland at this point by unscrewing the cap.

8 Connect the cable to the port.

9 Screw the gland into the radio unit until there is full contact between the gland and the radio unit.

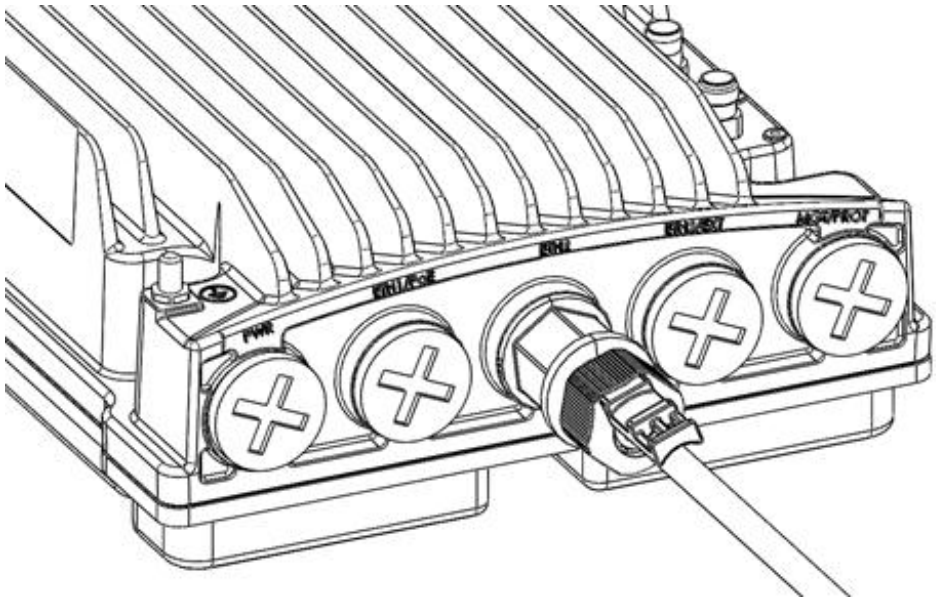

**Note**

Before tightening the gland, make sure the gland is aligned with the taped hole in the unit. Tightening the gland at an angle can ruin the thread on the gland and prevent proper sealing of the interface.

Tighten the gland gently and make sure there is no resistance. If there is resistance, stop immediately, and thread out the gland. Verify that the gland thread is not damaged and tighten the gland again.

10 Insert the main part of the gland into the thread in the radio body and tighten until there is full contact and the gasket is fully contained between the gland and the radio and cannot be seen. Tighten the gland gently and make sure there is no resistance. If there is resistance, stop immediately, and thread out the gland. Verify that the gland thread is not damaged and tighten the gland again.

**Caution**

Pay attention that the gland rubber is properly located and not damaged during the tightening of the gland cap. If the gland thread is damaged, do not use it!

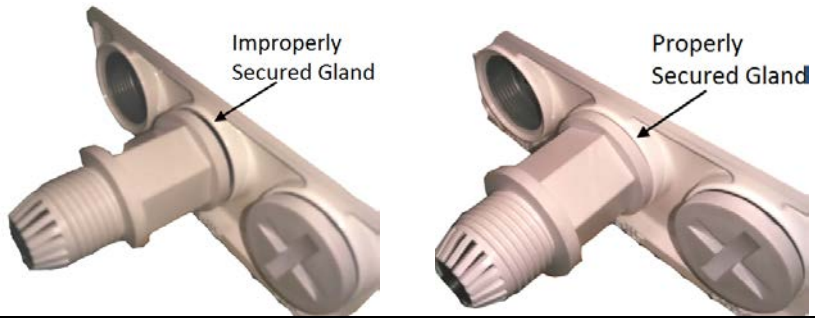

11 Tighten the rear portion of the gland onto the main part of the gland and make sure that the main part of the gland does not have an additional swivel after the rear portion is secured.

**Note**

If the main portion of the gland is rotated while the rear portion is seizing the cable, this may ruin the cable connector.

Tightening the Front Portion of the Gland

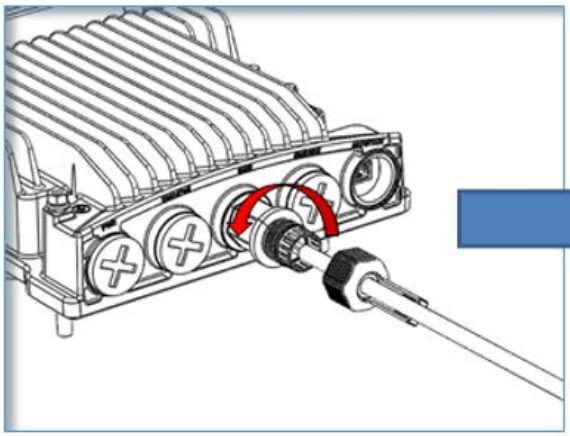

Tightening the Rear Portion of the Gland

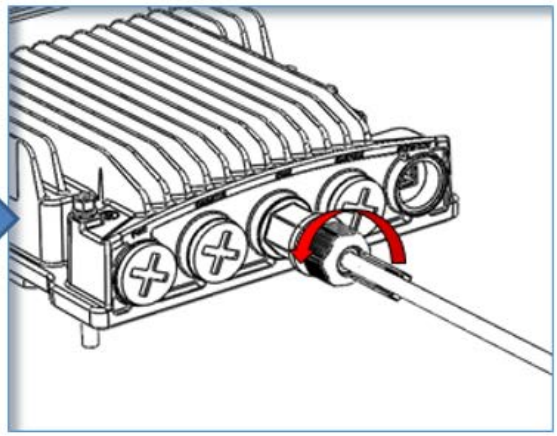

12 Secure the cable to the lip of the gland using a tie wrap.

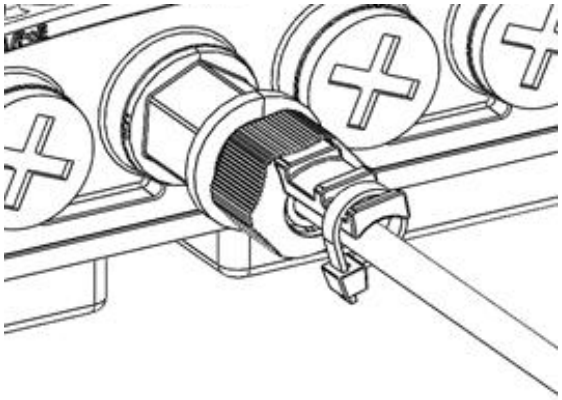

# Connecting an Optical Fiber Cable and SFP

To connect an optical fiber cable and the SFP transceiver:

1 Use a pre-assembled cable.

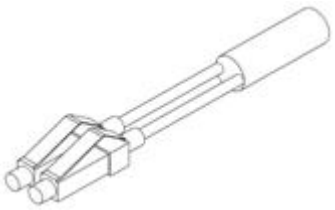

2 Split the connector into two separate LC Connectors (one for each fiber).

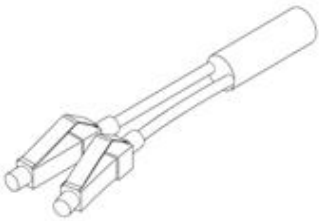

3 Remove the gland cap and rubber from the gland body.

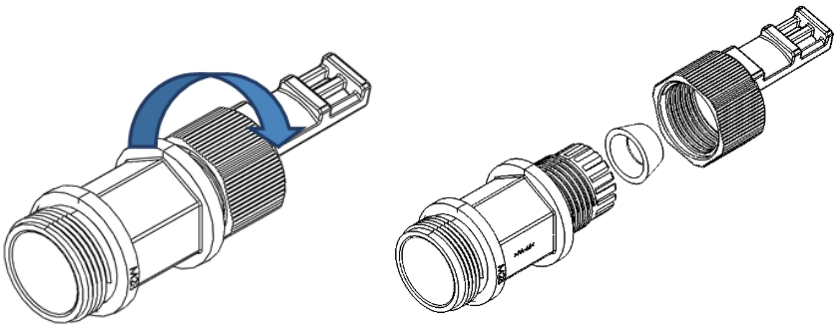

4 Slide the gland cap into the cable.

5 Slide the rubber into the cable.

6 Insert the fibers with the connectors one by one into the cable gland.

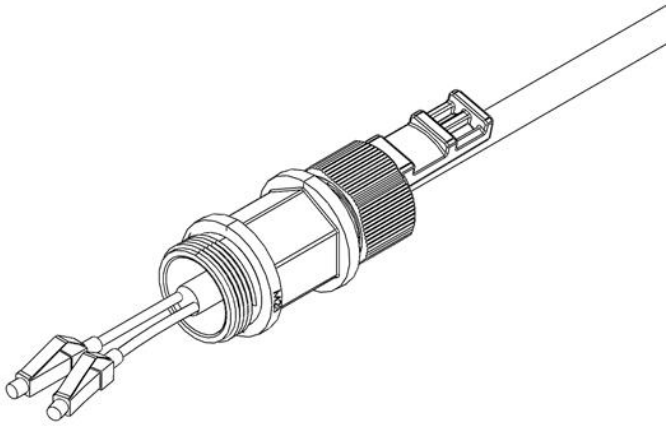

7 Secure the cable to the lip of the gland using a tie wrap.

**Note**

If you are raising the cable to a radio unit on a tower, this step is crucial to prevent the cable from slipping from the gland, which could damage the connector.

8 Connect the fibers to the SFP transceiver. Listen for the “click” to ensure that it is fully inserted.

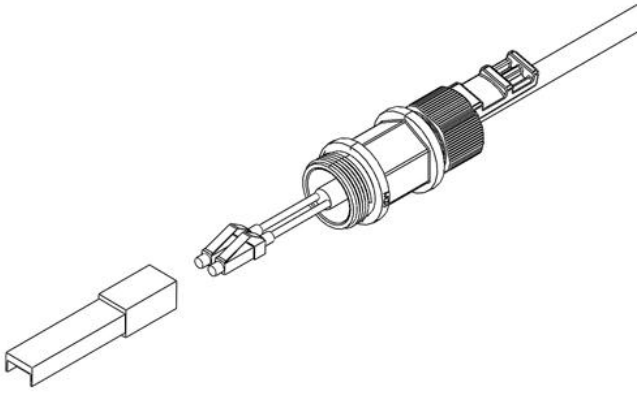

9 Remove the tie wrap securing the cable to the gland.

**Note**

A new tie wrap must be used to secure the cable to the gland at the end of the procedure, as described in Step 13.

10 Connect the connector into the PTP 820C HP LC connector.

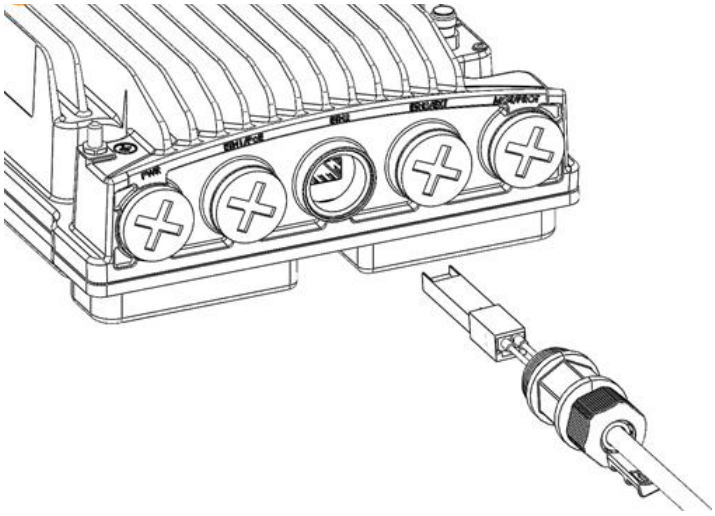

11 Tighten the gland to the radio unit until there is full contact between the gland and the radio unit.

12 Tighten the gland cap.

**Note**

Before tightening the gland, ensure it is aligned with the taped hole in the unit.

Tightening the gland at an angle can ruin the thread on the gland and prevent proper sealing of the interface Tighten the gland gently and make sure there is no resistance. If there is resistance, stop immediately, thread out the gland, and verify that the gland threads are not damaged. Then, tighten the gland again.

**Caution**

If the gland thread is damaged, do not use it.

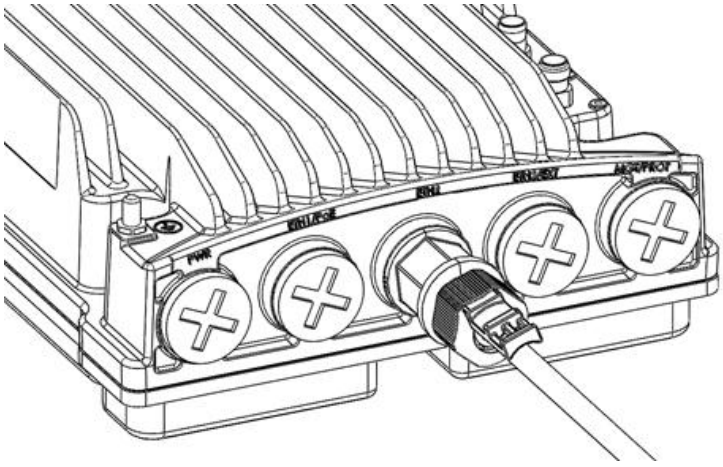

13 Secure the cable to the gland using a tie wrap.

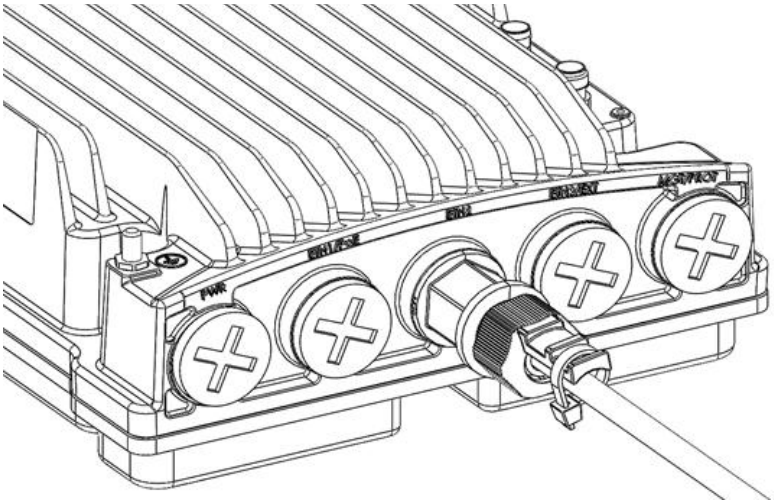
PWR

# Connecting a DC Power Cable

**Note**

The DC power cable and connector must be ordered separately. See DC Cable and Connector.

To connect a DC power cable:

1 Strip off 45 mm from the cable jacket.

2 Expose 10 mm at the edge of each of the two wires.

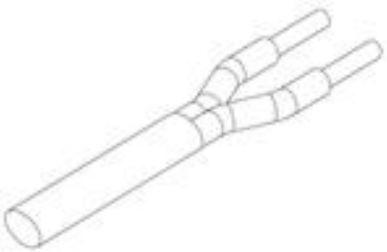

3 Insert the power cable into the gland.

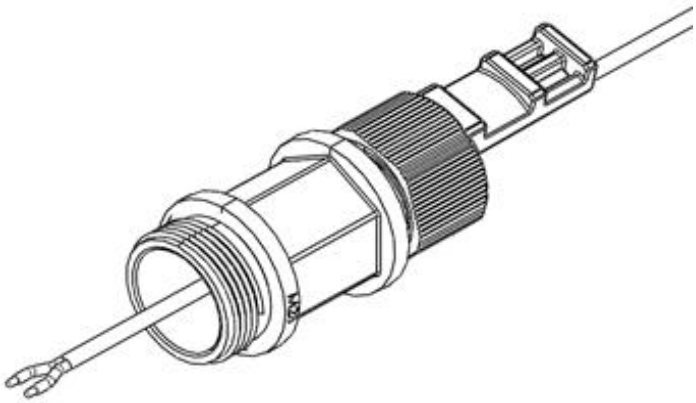

4 Insert the power cable wires into the power connector.

5 Insert the power cable wires into the power connector. Match “+”to the 0V wire and “-“ to the -48V wire.

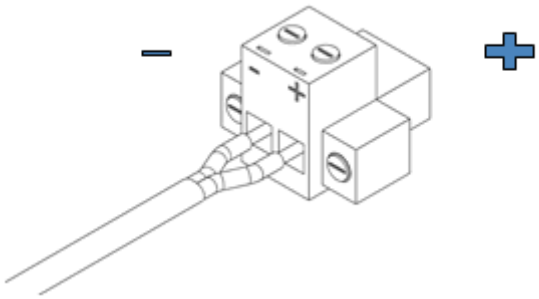

6 Tighten the two top screws.

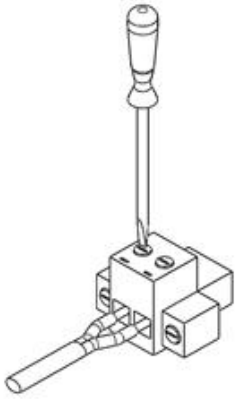

7 Plug the power cable with connector into the PTP 820C HP power connector.

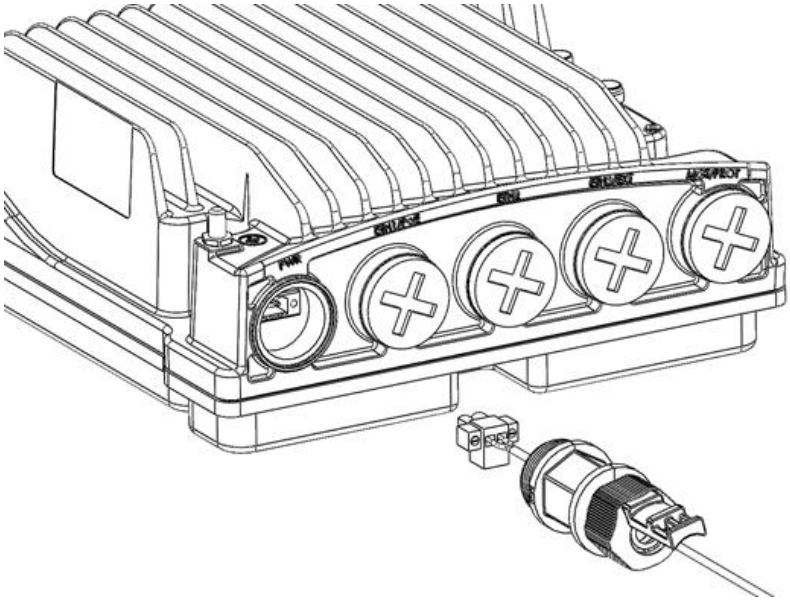

8 Tighten the two front screws.

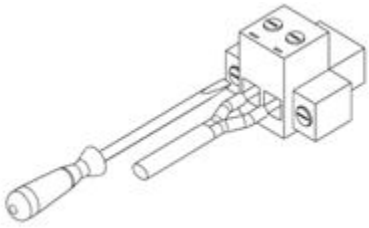

9 Screw the gland into the radio unit

**Caution**

Before tightening the gland, make sure the gland is even with the cover. Tighten the gland gently and make sure there is no resistance. If there is resistance, stop immediately and verify that the gland is not being inserted at an angle. Tightening the gland at an angle can ruin the thread on the gland and prevent proper sealing of the interface.

10 Tighten the gland cap.

11 Secure the cable to the gland with a tie wrap.

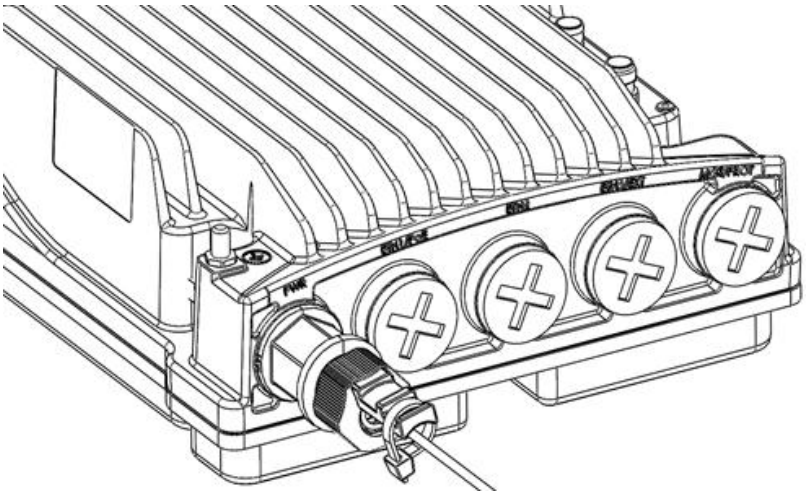

# Connecting the Ethernet Cable

If you need to assemble the Ethernet cable, follow the instructions in section Preparing the Ethernet Cable and Plug-in Field, then proceed to section Connection of Ethernet Cable to PTP 820C HP.

If you using a pre-assembled Ethernet cable, follow the instructions in section Preparing the Ethernet Cable Already Assembled, then proceed to section Connection of Ethernet Cable to PTP 820C HP.

**Note**

To ensure proper grounding and connectivity, it is recommended to use pre-assembled Ethernet cables.

## Preparing the Ethernet Cable and Plug-in Field

**Note**

To ensure proper grounding, the RJ-45 plug must be shielded, with a crimping tail.

Table 20: Materials for preparing Ethernet Data Cables

| P/N | Description |
|---|---|
| N000082L016A | PTP 820 CAT5E Outdoor 100m drum |
| N000082L014A | PTP 820 Glands_x5_KIT |
| N000082L017A | PTP 820 Grounding Kit for CAT5e F/UTP 8mm cable |
| N000082L073A | PTP 820 GBE_Connector_kit |

To prepare the Ethernet cable and plug-in field:

1 Prepare the gland and insert the cable, as described in General Installation Procedure.

2 Strip off approximately 45 mm of the outer insulation jacket from the CAT5E cable.

3 Do not strip off the end of the cable shield, but rather, twist the shield to form a braid.

4 Roll back the foil shield insulation and wrap the drain wire around the foil. Do not remove any insulation from the conductors.

5 Align the colored wires.

**Note**

Cord colors should be matched to the same pins on both ends of the cable

6 Trim all wires to the same length. About 12 mm on the left should be exposed from the inner sheath.

7 Separate the wires and place the twisted braid between the separated wires.

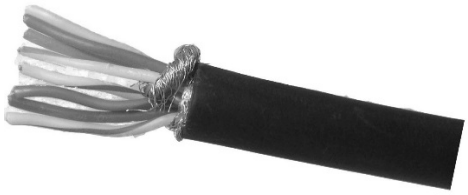

8 Insert the wires into the RJ45 plug. Verify that each wire is fully inserted into the front of the RJ45 plug and in the correct order, according to the pinouts shown in Section Outdoor Ethernet Cable Specifications. The sheath of the Ethernet cable should extend into the plug by about 13 mm and held in place by the crimp.

9 Extend the cable jacket with the shield into the connector about 5 mm for strain relief and shielding connection.

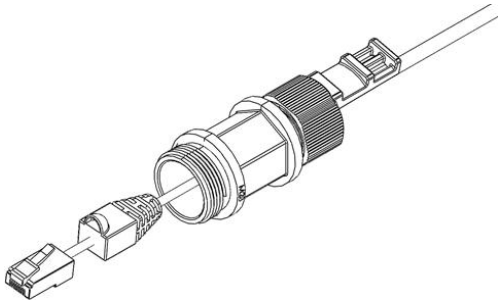

10 Wrap the twisted braid firmly around the cable jacket and let the crimping tail of the RJ45 plug envelop it.

**Caution**

To ensure proper grounding, it is essential that the twisted braid be firmly connected to the RJ45 plug.

11 Crimp the RJ45 plug with the crimp tool. Make sure the twisted braid is crimped firmly to the RJ45 plug.

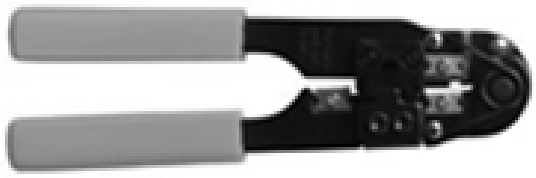

12 Verify that the wires ended up the correct order and that the wires extend to the front of the RJ45 plug and make good contact with the metal contacts in the RJ45 plug.

13 Push back the CAT5E plug cover on the connector plug.

**Note**

It is recommended that the newly prepared cable be tested with a Cable Analyzer such as the FLUKE DTX-1800 (or the equivalent), to make sure the cable complies with ANSI/TIA/EIA-568-B-2. Make sure to verify both connectivity and grounding continuity at both ends of the cable.

## Preparing the Ethernet Cable Already Assembled

To prepare the Ethernet cable already assembled:

1 Release the gland cap and the gland rubber slightly.

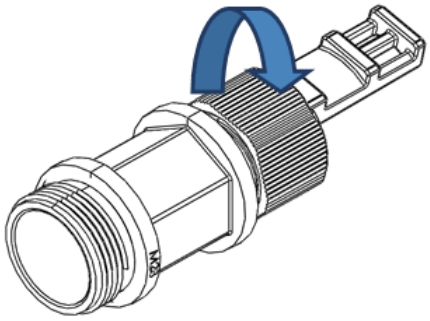

2 Insert the CAT5E cable into the gland cap and into the rubber gland.

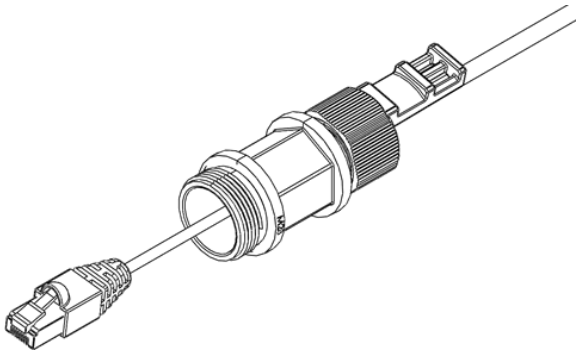

3 Insert the CAT5E cable into the gland body.

## Connection of Ethernet Cable to PTP 820C HP

To connect the Ethernet cable to the PTP 820C HP:

1 Remove the relevant cap from the PTP 820C HP radio. You can use the side of the gland to unscrew the cap.

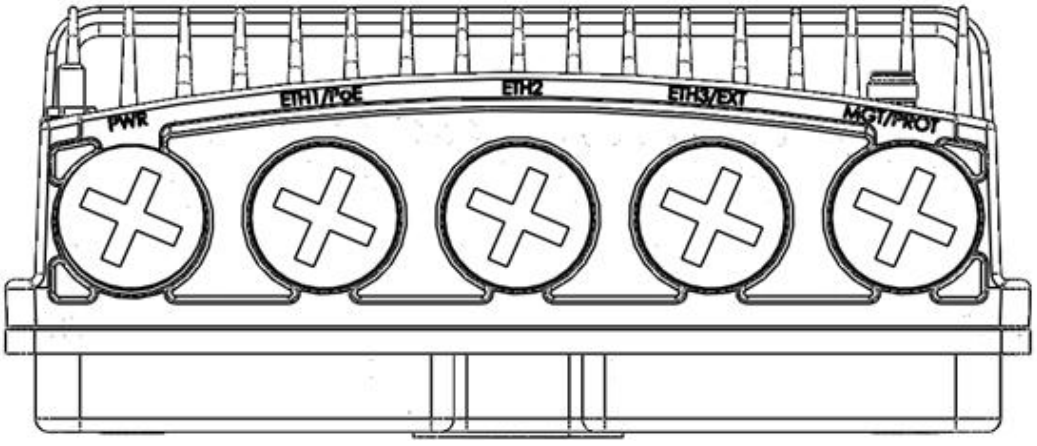


2 Connect the CAT5E cable to the PTP 820C HP.

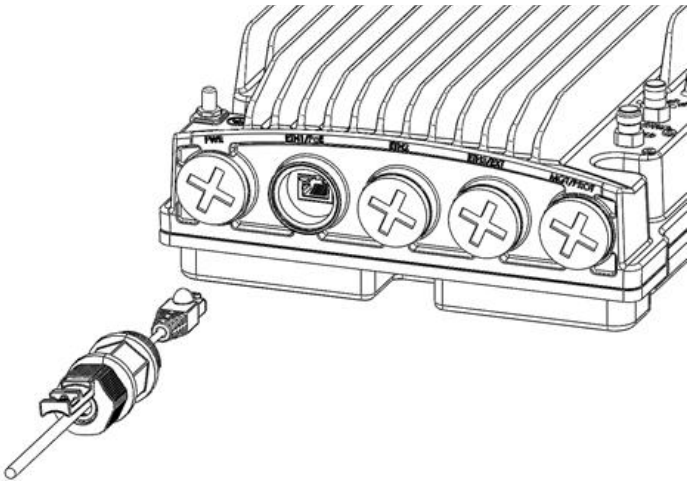

3 Screw the gland into the radio unit.

**Caution**

Before tightening the gland, make sure the gland is even with the cover. Tighten the gland gently and make sure there is no resistance. If there is resistance, stop immediately and verify that the gland is not being inserted at an angle. Tightening the gland at an angle can ruin the thread on the gland and prevent proper sealing of the interface.

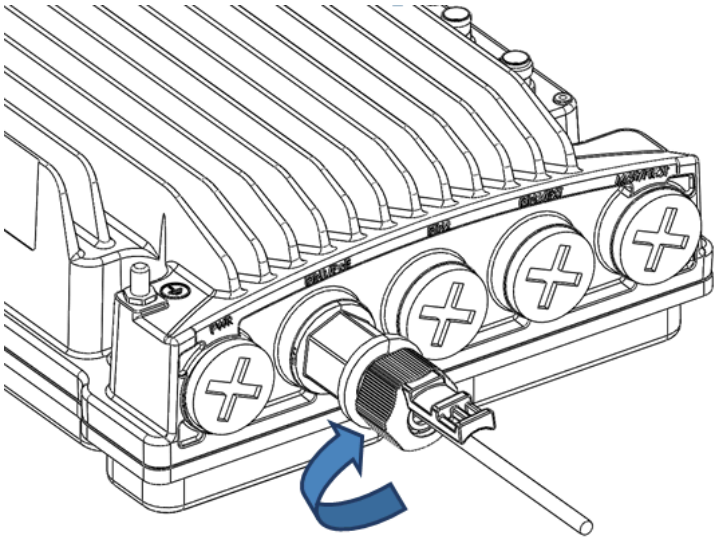

4 Tighten the gland cap.

5 Secure the cable to the gland using a tie wrap.

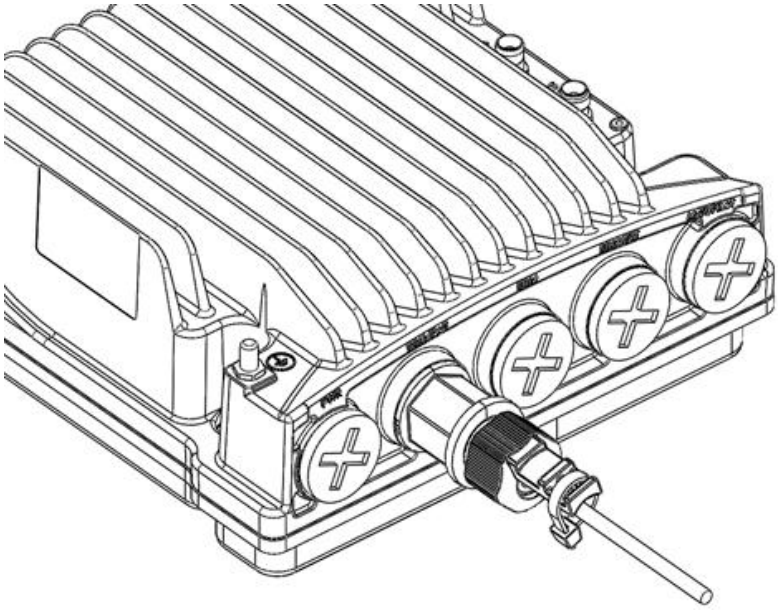

# Management Connection for 1+1/2+2 HSB Configurations

In 4x4 MIMO and all HSB protection configurations, two Y-splitter cables and a special signaling cable must be used to connect the management ports (MGT/PROT) of the two PTP 820C HP units and provide management access to each unit.

The MIMO/Protection signaling cables are available pre-assembled from Cambium in various lengths, but users can also prepare them in the field.

The following sections explain how to prepare and connect these cables.

## Preparing a MIMO/Protection Signaling Cable

The MIMO/Protection signaling cables require the following pinouts.

Figure 21 MIMO/Protection Signaling Cable Pinouts

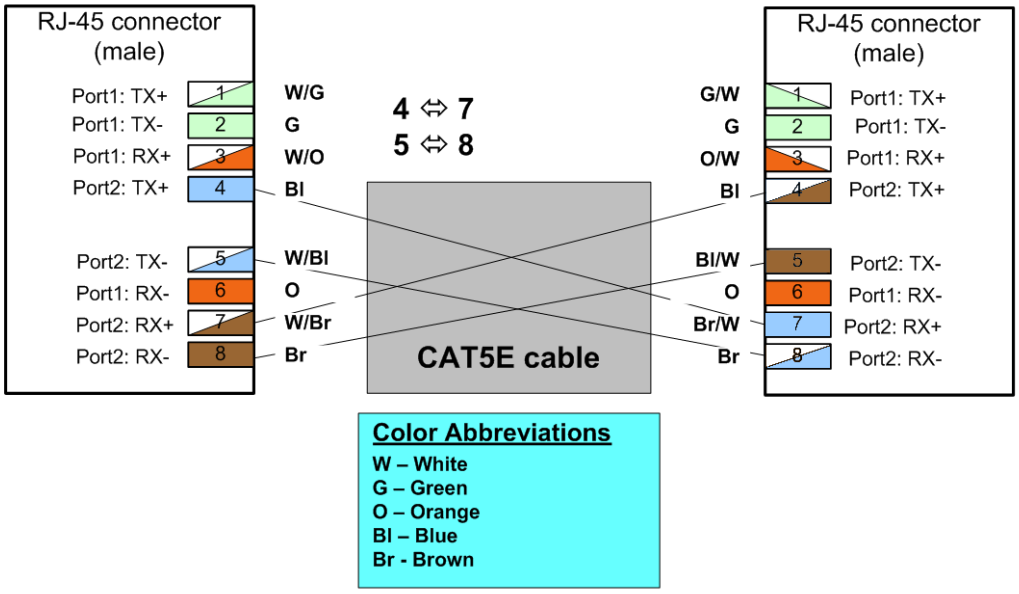


**Note**

Other than the pinout connection described above, the cable should be prepared according to the cable preparation procedure described in Connecting the Ethernet Cable.

## Connecting the MIMO/Protection Splitters and Protection Signaling Cable

Each splitter has three ports:

- System plug (“Sys”) – The system plug should be connected to the PTP 820C HP’s management port.

- Management port (“Mng”) – A standard CAT5E cable should be connected to the splitter’s management port in order to utilize out-of-band (external) management.

**Note**

Even for systems that use in-band management, initial configuration of a 4x4 MIMO and any HSB protection configuration must be performed manually using out-of-band management.

- MIMO/Protection signaling port (“Prot”) – A MIMO/Protection signaling cross cable, as described above, should be connected between this port and the other “MIMO/Prot” port of the second splitter on the mate PTP 820C HP unit.

The following figure demonstrates a 4x4 MIMO configuration in which both PTP 820C HP units are connected to an external management station and to each other, using two splitters.

Figure 22 4x4 MIMO or HSB Protection Configuration with External Management

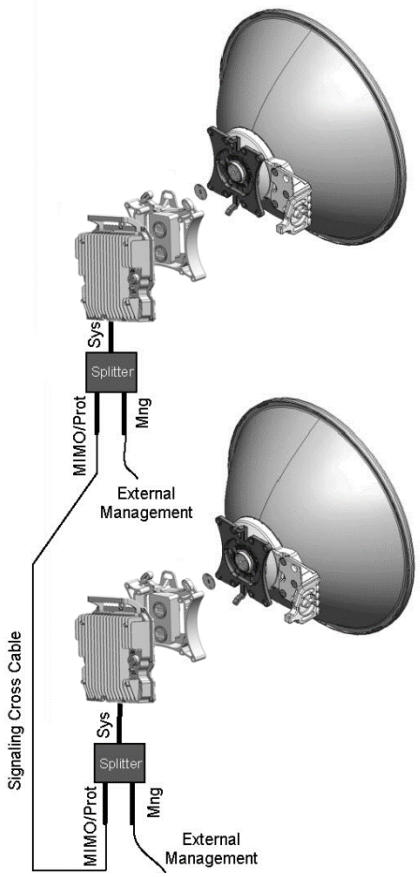

# Chapter 5: Generic Installation Procedures and Notes

This chapter describes the generic nstallation procedure and notes for PTP 820C HP.

This chapter includes:


- General Notes Concerning All Installation Procedures

# General Notes Concerning All Installation Procedures

Some of the configurations described in this manual may not be supported with every Cambium version. For up-to-date information about which configurations are supported, refer to the Release Notes for the Cambium version you are using.

Note that 4 and 5 GHz links are currently supported only with diplexer-based branching and remote-mount configurations.

Since the PTP 820C HP architecture is of a Dual Core nature, each dual core configuration can be considered as single core configuration hardware ready for its dual core counterpart. Therefore, you should follow the same procedure for 2+0 SP installation, if you want to install a 1+0 SP HW ready for 2+0 SP.

One of the major benefits of the PTP 820C HP and the dual core architecture is that upgrading can be done remotely by uploading the correct software license.

Before starting an installation, use a leveler to make sure that the poles are 100% vertical. You need to check both sides of each pole at 90 degrees separation. This is a critical step in any link but most important when installing MIMO or XPIC.

**Note**

Do not remove the transparent pressure windows located on the antenna interfaces.

Figure 23 Transparent Pressure Windows

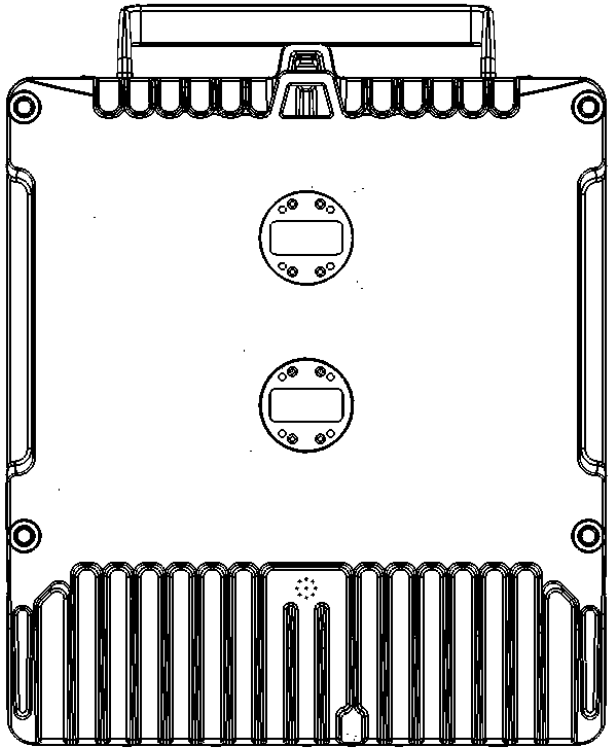

# Chapter 6: Installation Instructions for Configurations with Diplexer-Based Branching

## Torque Requirements

When tightening the captive screws, use 20 Nm torque for radio-antenna, radio-mediation device, and mediation device-antenna connections. In order to avoid misalignment, screws should be tightened progressively.

For installing the diplexer unit on the radio, use 5 Nm torque.

When fastening a waveguide to the radio or mediation device, use the following torque, according to frequency and screw type:

- 6 GHz: M5/#10-32: 3.5 Nm
- 7/8-15 GHz: M4/#8-32: 2.5 Nm

In addition, when connecting the diplexer to the radio and the radio to the mediation device, screws should be cross-tightened gradually. In other words, partially tighten one screw, then partially tighten the opposite screw. For example, if you start with the screw on the upper left, proceed to the screw on the lower right, then the upper right, then the lower left. Tighten each screw partially, then in the same order, tighten the screws further until each screw is fully tightened.

# General Radio Installation

The PTP 820C HP has been designed for easy installation, with various installation options to provide maximum flexibility.

In most cases, the Diplexers unit should be attached to the antenna or mediation device first. Then, attach the radio unit to the Diplexers unit.

The PTP 820C HP radio can be assembled to the diplexers kit prior to installation, then mounted to the antenna or mediation device as a single unit. For details, see Installing the Diplexer on the Radio.

Figure 24 PTP 820C HP Installation – Radio and Diplexers Unit Pre-Assembled

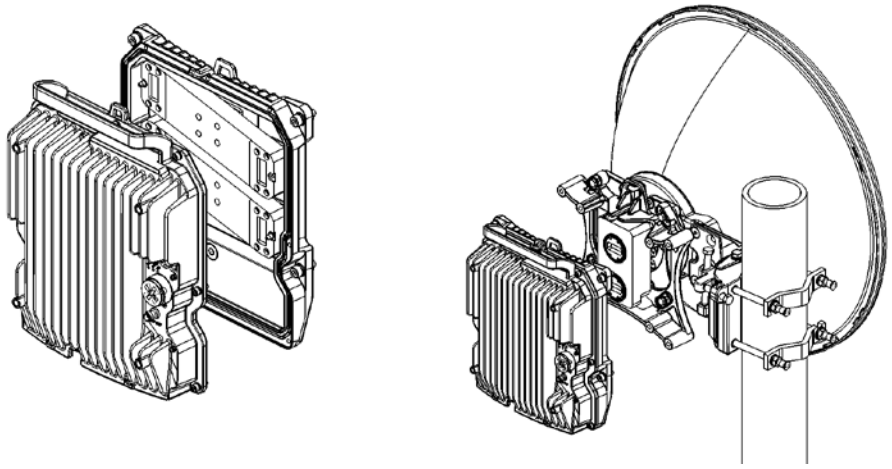

Figure 25 PTP 820C HP Installation – Attaching the Diplexers Unit Before the Radio Unit

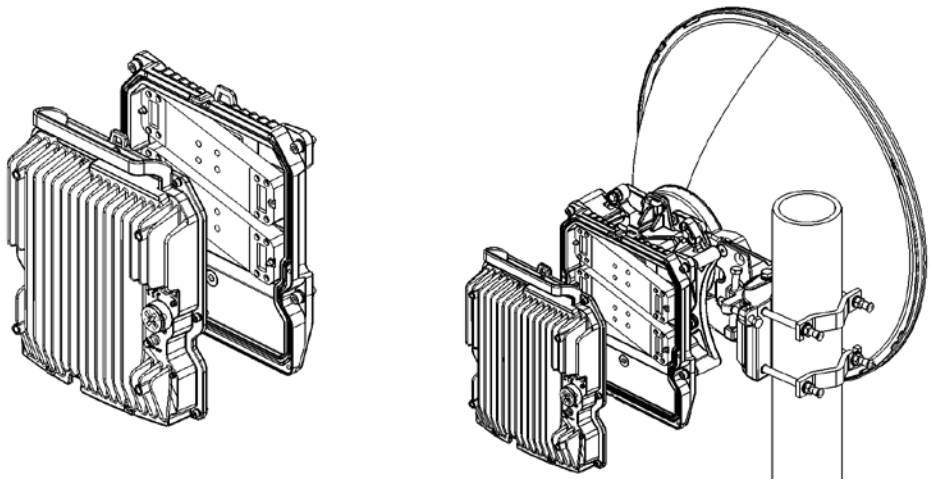

# Installing the Diplexer on the Radio

The PTP 820C HP is delivered as two separate components: a generic radio unit and a diplexer unit. This section explains how to attach the diplexer unit to the radio unit.

**Note**

Mounting of the diplexer unit to the radio unit should be performed by certified personnel in a clean, temperature and humidity-controlled environment.

## List of Items

| Item | Description | Quantity | Model |
|---|---|---|---|
| 1 | PTP 820C HP Radio Unit | 1 | See Models for Radio Unit |
| 2 | PTP 820C HP Diplexer Unit | 1 | See Models for Diplexer Unit |

## Required Tools

- Torque Wrench With Metric Hexagon Socket Key Wrench #4 (Allen key)

## Procedure

1 Prior to the installation, remove the sticker which is covering the diplexer ports on the Diplexer unit and the sticker that covers the TRX ports on the radio unit.

2 Position the diplexer unit on the radio unit so that the two location pins mounted on the TRX ports of the diplexer unit (Figure 26) fit into the corresponding holes in the radio unit (Figure 27).

3 Attach the diplexer to the TRX using the two location pins. Make sure that the hook and the carrying handle are on the same side in both the radio unit and the diplexer unit (Figure 29).

Figure 26 Fitting the Diplexer Unit to the Radio Unit - Radio Side

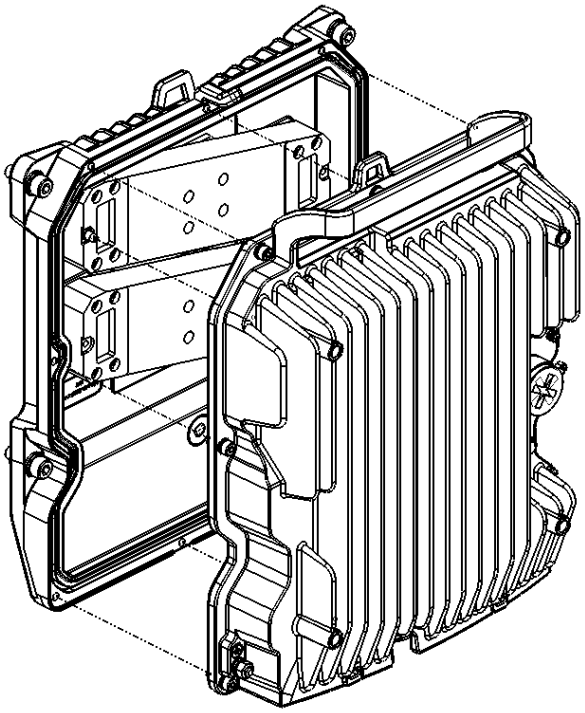

Figure 27 Fitting the Diplexer Unit to the Radio Unit - Diplexer Unit Side

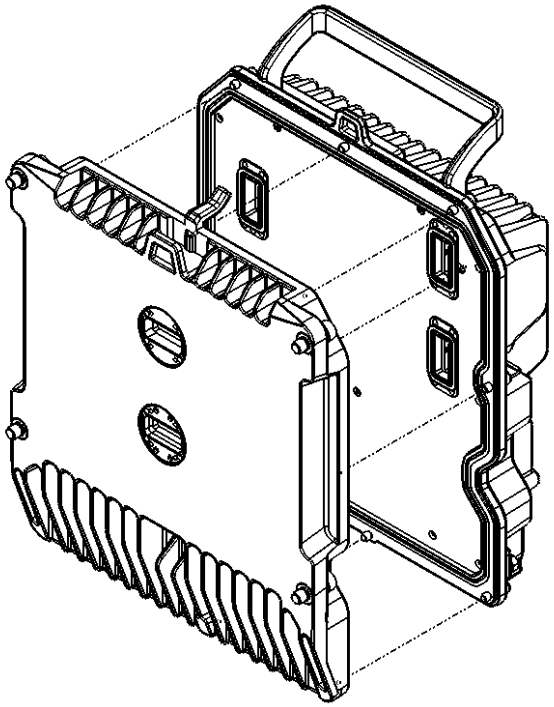

Figure 28 Radio and Diplexer Units Together

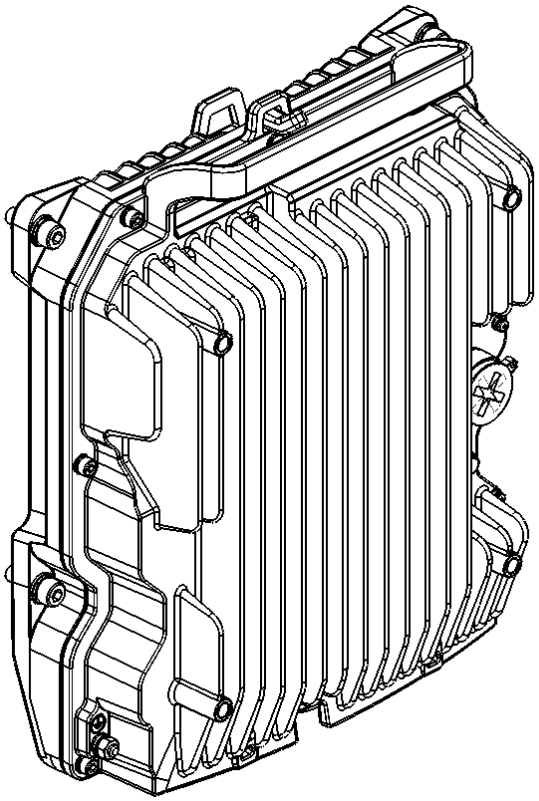

Figure 29 Hook and Carrying Handle

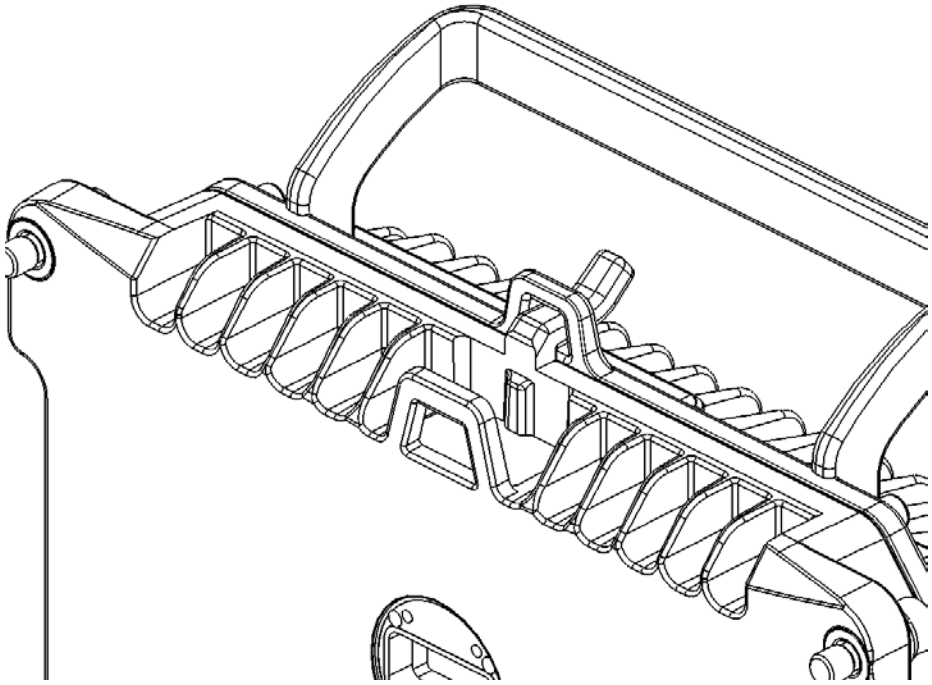

4 Secure the diplexer unit to the radio unit using the eight M5 screws supplied with the radio unit. First, gently tighten the screws in the order shown in Figure 38. Then strongly tighten the screws in the same order.

Figure 30 Securing the Diplexer Unit to the Radio Unit

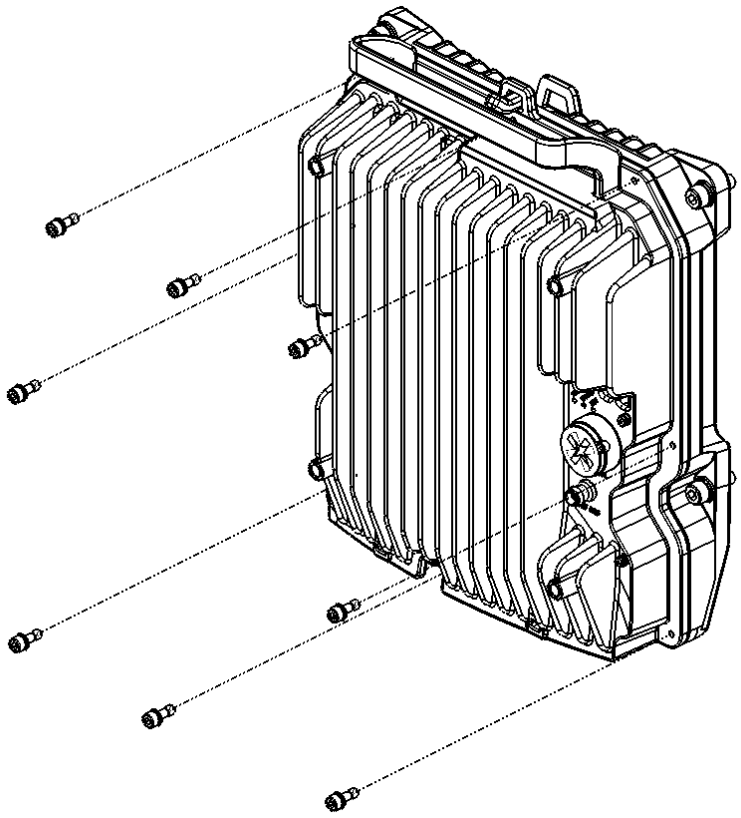

5 Proceed to install the PTP 820C HP in the desired configuration, as described in the following sections.

# Chapter 7: PTP 820C HP Detailed Configurations Description

This chapter describes the PTP 820C HP detailed configuration description.

This chapter includes:


- 2+0 Dual Polarization Direct Mount
- 2+0 Dual Polarization Remote Mount
- 2+0 Single Polarization Direct Mount
- 2+2 HSB Double Polarization Direct Mount
- 2+2 HSB Double Polarization Remote Mount
- 2+2 HSB Single Polarization Direct Mount
- 2 x 2+0 Dual Polarization Direct Mount
- 2 x 2+0 Dual Polarization Remote Mount
- 2 x 2+0 Single Polarization Direct Mount
- 2x2 LoS MIMO Direct Mount
- 2x2 LoS MIMO Remote Mount
- 4x4 LoS MIMO Direct Mount
- 4+0 Dual Polarization, 2+2HSB Single/Dual Polarization Direct Mount
- 4+0 with Dual Circulator Direct Mount
- 4+0 Dual Polarization, 2+2HSB Dual Polarization Remote Mount
- 4+0 with Dual Circulator Remote Mount
- 2+2 HSB Single Polarization Remote Mount
- Dual Circulator Multi-Carrier Kit Installation
- AFR 1+0 Hub Site

# 2+0 Dual Polarization Direct Mount

**Note**

This procedure can also be used for 1+0 DP HW ready for 2+0 DP configuration.

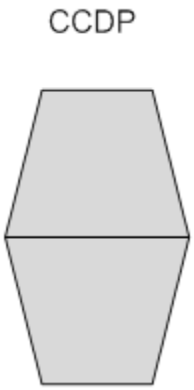


## List of Items

| Item | Description | Quantity | Model |
|---|---|---|---|
| 1 | PTP 820C HP Radio Unit | 1 | See Models for Radio Unit |
| 2 | PTP 820C HP Diplexer Unit | 1 | See Models for Diplexer Unit |
| 3 | PTP 820C HP OMT Kit | 1 | DXDH-MD-OMT-*ff* |
| 4 | CIRC./CIRC. Adaptor | 1 | Per Antenna Vendor |

## Required Tools

- Metric offset hexagon key set
- Metric wrench key set

## Procedure

1 Prior to the installation, follow the antenna manufacturer's instructions to use the circular adaptor. (Remove the existing rectangular transition, swap the O-ring, and install the circular transition instead.)

2 Connect the OMT kit to the antenna and secure it with four screws.

**Important:** Verify that the O-ring is properly mounted between the antenna transition and the OMT.

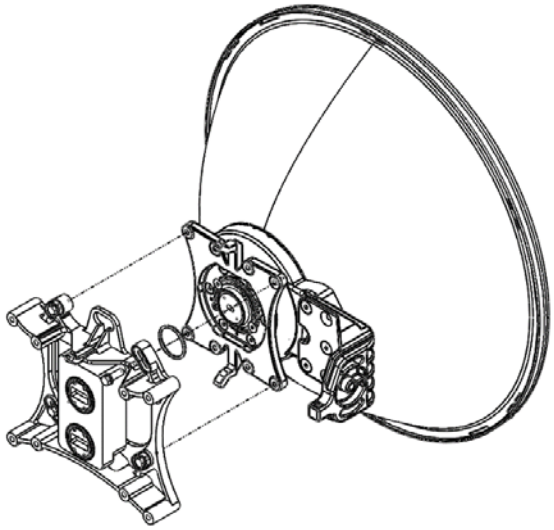

3 Connect the PTP 820C HP radio/dual coupler to the OMT kit using the four M8 captive screws and washers supplied and tighten the screws.

**Important:** Verify that the O-rings are properly mounted between the OMT ports and the radio.

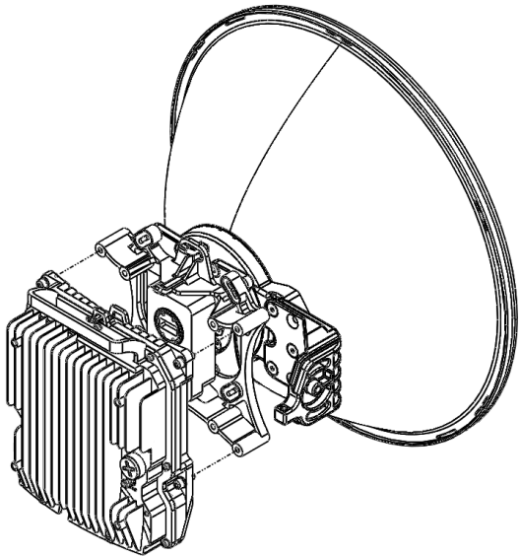

# 2+0 Dual Polarization Remote Mount

This procedure is for use with Interface antennas, up to six feet.

For standard interface antennas (six feet and larger), no OMT and no Circ./Circ. Adaptor are used, and the flexible waveguides are connected directly to the antenna flanges. For instructions how to connect the waveguides to the antenna flanges, refer to the antenna vendor's documentation.

**Note**

This procedure can also be used for 1+0 DP HW ready for 2+0 DP configurations.

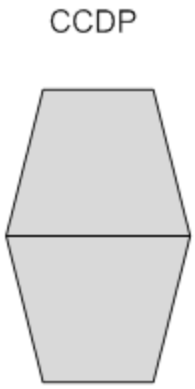

## List of Items

| Item | Description | Quantity | Remarks |
|---|---|---|---|
| 1 | PTP 820C HP Radio Unit | 1 | See Models for Radio Unit |
| 2 | PTP 820C HP Diplexer Unit | 1 | See Models for Diplexer Unit |
| 3 | PTP 820C HP OMT Kit | 1 | |
| 4 | Flexible Waveguide Kit PTP 820C HP | 2 | |
| 5 | PTP 820C HP DC Adaptor Remote Mount Kit PTP 820C HP | 1 | |
| 6 | Circ./Circ. Adaptor | 1 | Per Antenna Vendor. Not used for standard interface antennas (six feet and larger). |

## Required Tools

- Metric offset hexagon key set
- Metric wrench key set

## Procedure

1 Prior to the installation, follow the antenna manufacturer's instructions to use the circular adaptor. (Remove the existing rectangular transition, swap the O-ring, and install the circular transition instead.)

2 Connect the OMT kit to the antenna and secure it with four screws.

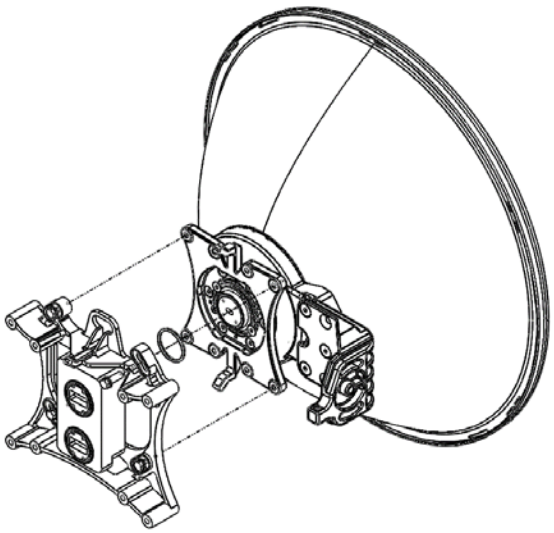

**Important:** Verify that the O-ring is properly mounted between the antenna transition and the OMT.

3 Mount and tighten the Remote MountAdapter to the PTP 820C HP OMT ports using the screws supplied with the adapter kit:

Figure 31 6 GHz – Mounting the First Adaptor

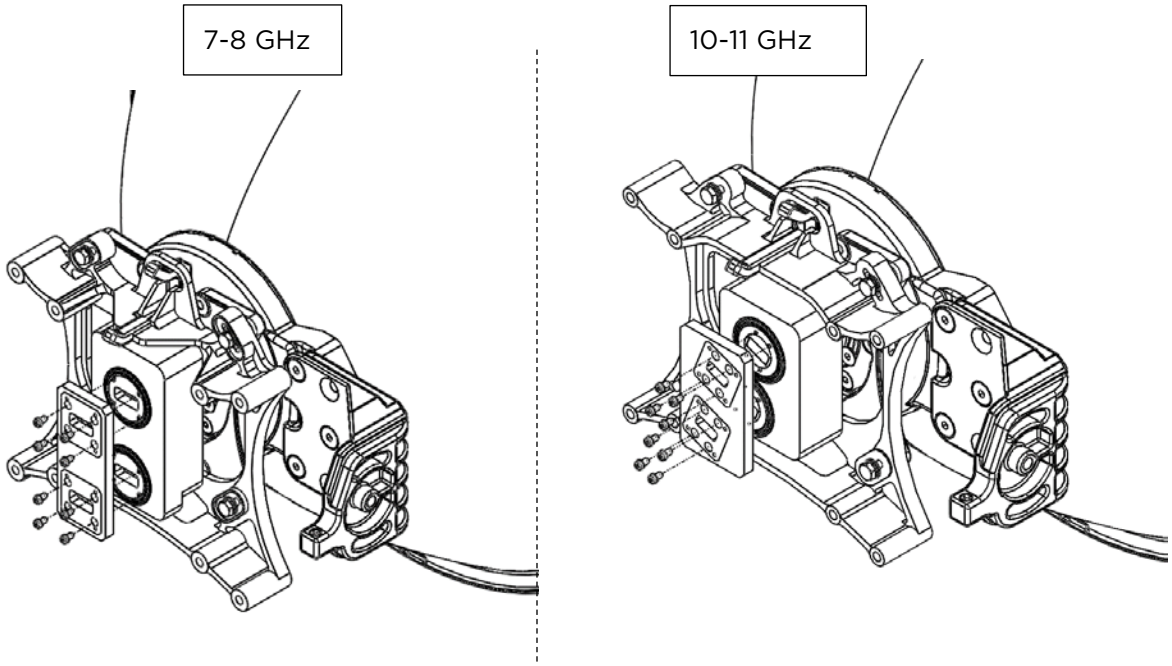


4 Mount and tighten the O-ring and the flexible waveguide to the adapter ports using the screws supplied with the flexible waveguide kit.

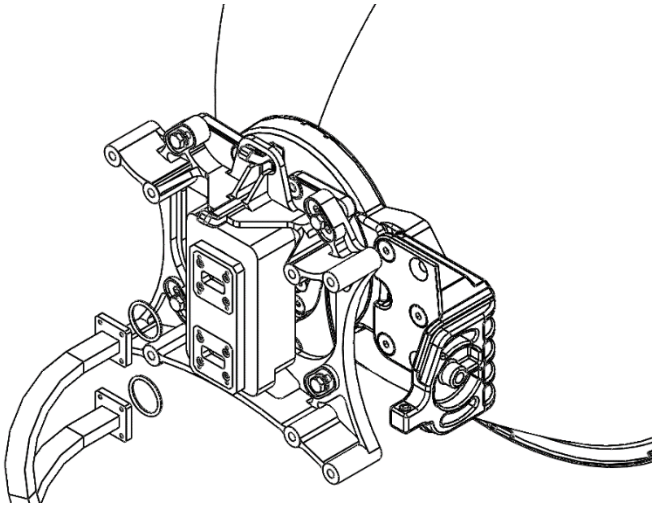

**Important:** Verify that the O-rings are correctly mounted between the OMT ports and each flexible waveguide.

5 Mount and tighten the PTP 820C HP DC pole mount to the pole using the four washers and screws supplied with the PTP 820C HP DC pole mount kit.

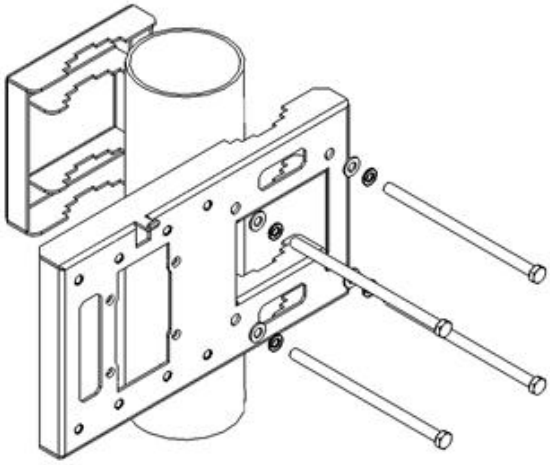

- For 4-5 GHz configurations, use 39 Nm torque.
- For 6-11 GHz configurations, use 39 Nm torque.

Figure 32 Remote Pole Mount Kit- 6-11 GHz

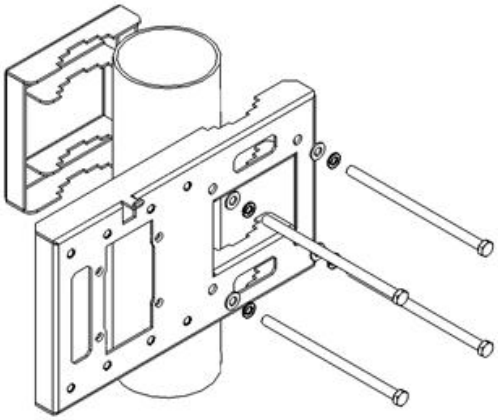

Figure 33 Remote Pole Mount Kit – 4-5 GHz

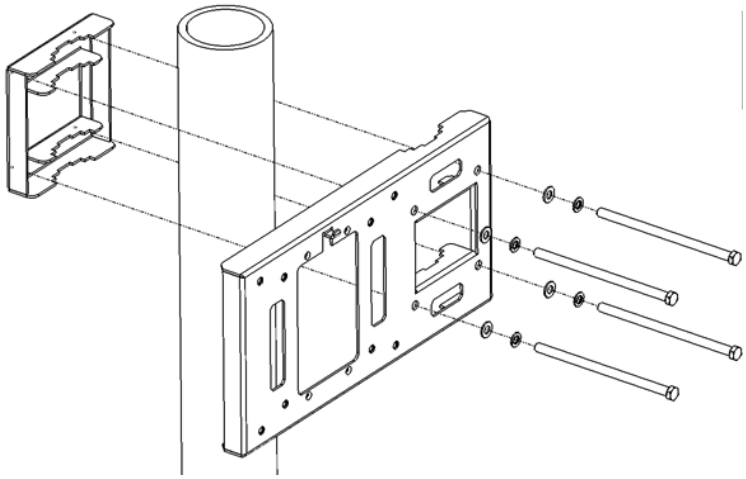

6 Mount and tighten the PTP 820C HP Remote Mount Adaptor plate (supplied in PTP 820C HP Adaptor Remote Mount kit) to the PTP 820C HP Pole Mount using the four flat screws supplied with thePTP 820C HP Adaptor Remote Mount kit.

Figure 34 Remote Pole Mount Kit – 6-11 GHz

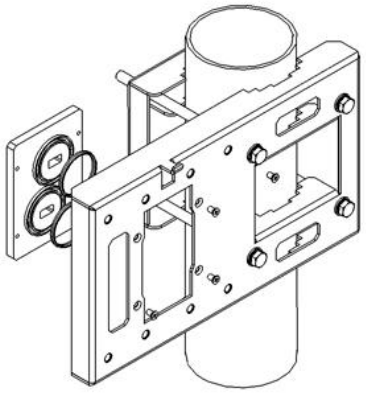

Figure 35 Remote Pole Mount Kit – 4-5 GHz

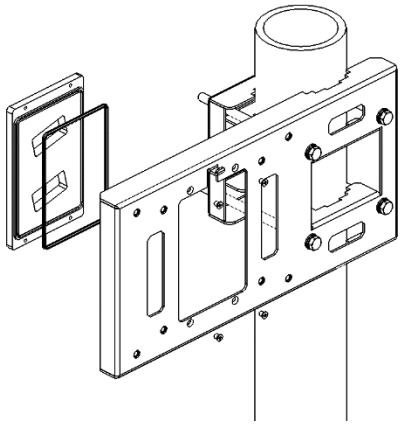

7 Mount and tighten the PTP 820C HP Radio to the PTP 820C HP Pole Mount using the four flat screws supplied with the PTP 820C HP Radio.

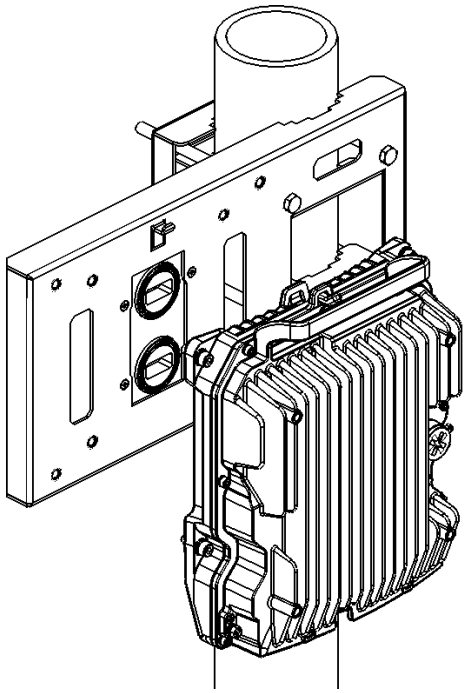

8 Mount and tighten both Flexible WGs with their O-ring to the PTP 820C HP Remote Mount Adaptor ports using the four screws supplied with each Flexible WG kit.

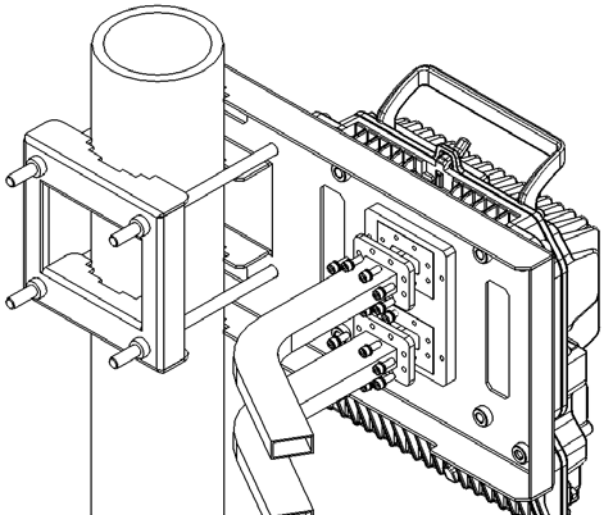

# 2+0 Single Polarization Direct Mount

**Note**

This procedure can also be used for 1+0 SP HW ready for 2+0 SP configuration.

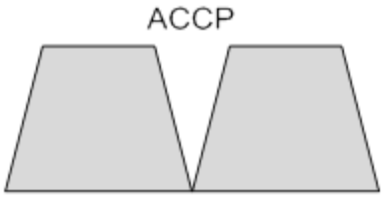


## List of Items

| Item | Description | Quantity | Model |
|---|---|---|---|
| 1 | PTP 820C HP RADIO | 1 | See Models for Radio Unit |
| 2 | PTP 820C HP Diplexer Unit | 1 | See Models for Diplexer Unit |
| 3 | PTP 820C HP Splitter Kit | 1 | |

## Required Tools

- Metric offset hexagon key set
- Phillips #1, #2 screwdriver

## Procedure

1 Adjust the twist on the Splitter Kit. Perform one of the following steps, according to the required polarization (horizontal or vertical).

- For horizontal polarization, locate the twist with the letter “H” on top.

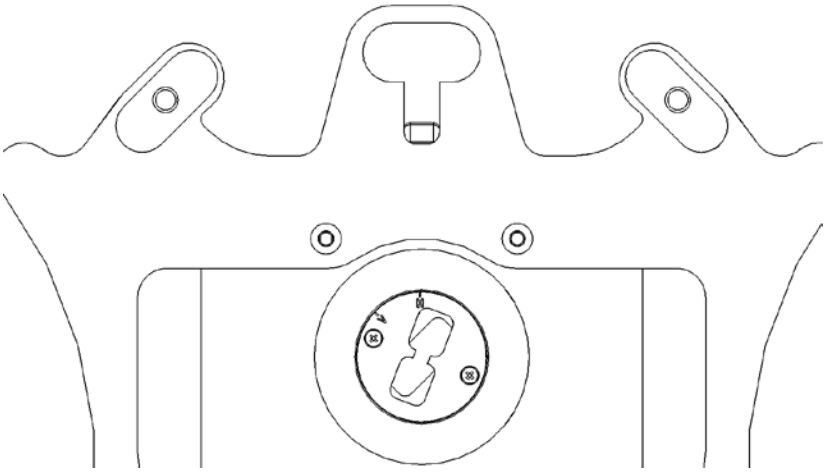

- For vertical polarization, locate the twist with the letter “V” on top.

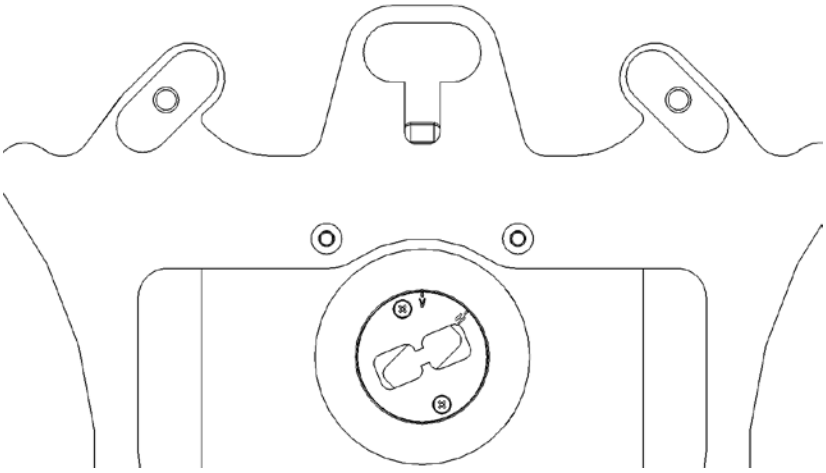

2 Mount and tighten the PTP 820C HP Splitter Kit on the antenna using the four M8 screws and washers.

**Important:** Verify that the O-ring is properly mounted between the antenna transition and the splitter.

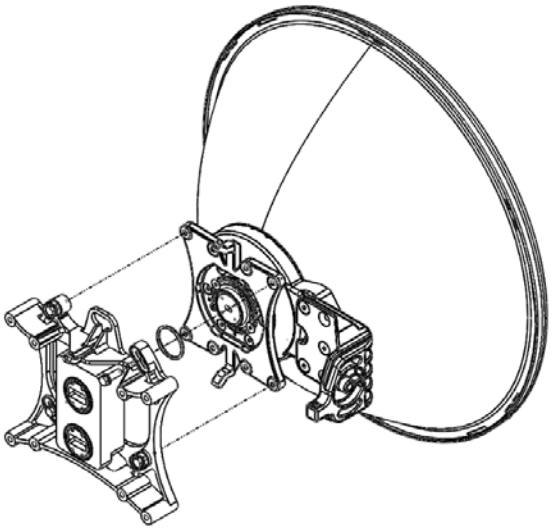

3 Connect the PTP 820C HP DC radio to the splitter kit using the four M8 captive screws and washers supplied, and tighten the screws.

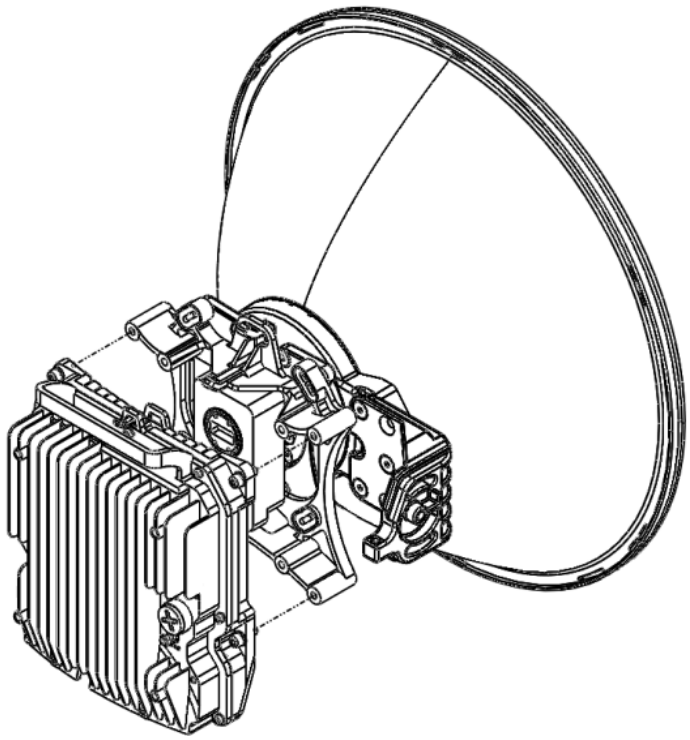

**Important:** Verify that the O-rings are properly mounted between the OMT ports and the radio/dual coupler.

# 2+2 HSB Double Polarization Direct Mount

**Note**

This procedure can also be used for 2 x 1+1 HSB DP HW ready for 2+2 HSB DP configurations.

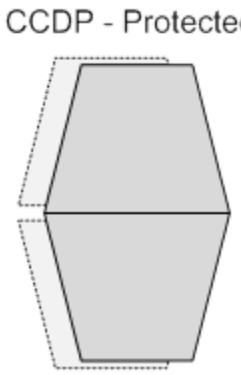


## List of Items

| Item | Description | Quantity | Model |
|---|---|---|---|
| 1 | PTP 820C HP RADIO | 2 | See Models for Radio Unit |
| 2 | PP 820C HP Diplexer Unit | 2 | See Models for Diplexer Unit |
| 3 | PTP 820C HP OMT KIT | 1 | |
| 4 | PTP 820C HP DUAL COUPLER KIT | 1 | |
| 5 | CIRC./CIRC. ADAPTOR | 1 | Per Antenna Vendor |

## Required Tools

- Metric offset hexagon key set
- Metric wrench key set

## Procedure

1 Prior to the installation, follow the antenna manufacturer's instructions to use the circular adaptor. (Remove the existing rectangular transition, swap the O-ring, and install the circular transition instead.)

2 Connect the PTP 820C HP OMT Kit to the antenna and secure it with four screws. Verify existence of the O-ring.

**Important:** Verify that the O-ring is properly mounted between the antenna transition and the OMT.

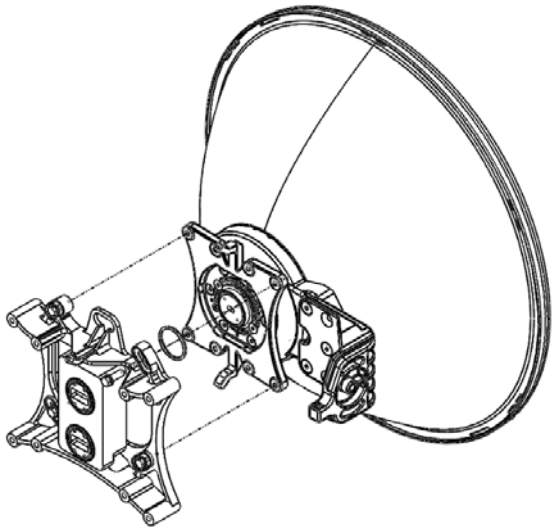

3 Connect the PTP 820C HP Dual Coupler Kit to the OMT Kit using four M8 screws and washers, and tighten the screws.

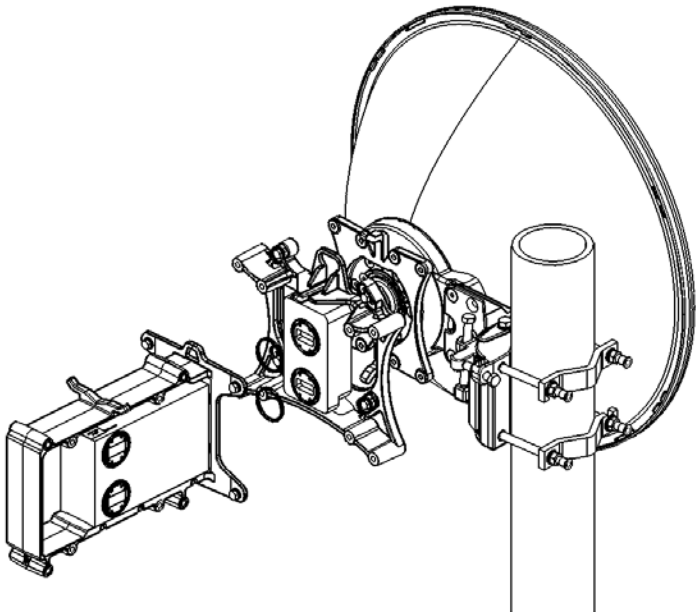

**Important:** Verify that the O-rings are properly mounted between the OMT ports and the dual coupler

4 Mount and tighten the PTP 820C HP DC radio unit to both sides of the Dual Coupler Kit using the supplied captive screws and washers. Pay attention that the O-rings are correctly mounted on the radio ports of the PTP 820C HP Dual Coupler.

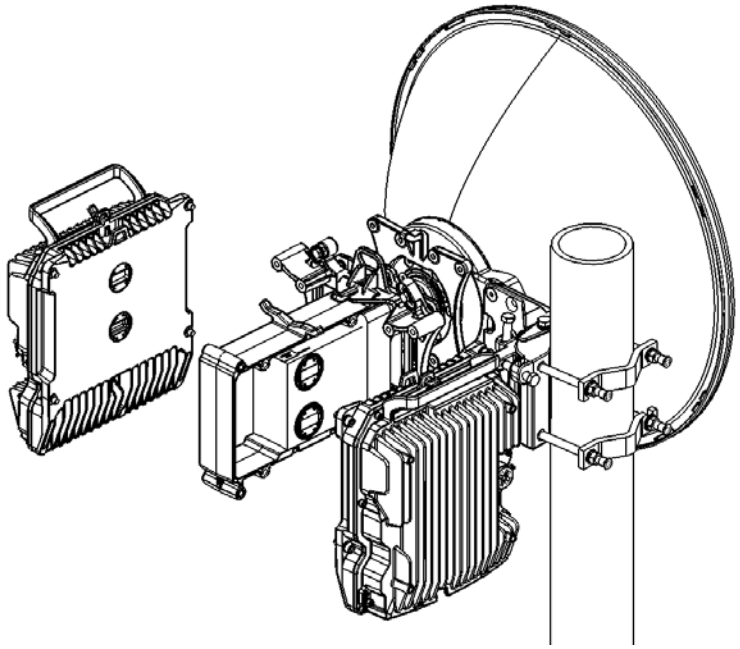

5 Connect the MIMO signaling cable between the management ports of both units. For additional instructions on preparing and connecting this cable, refer to Preparing a MIMO/Protection Signaling Cable.

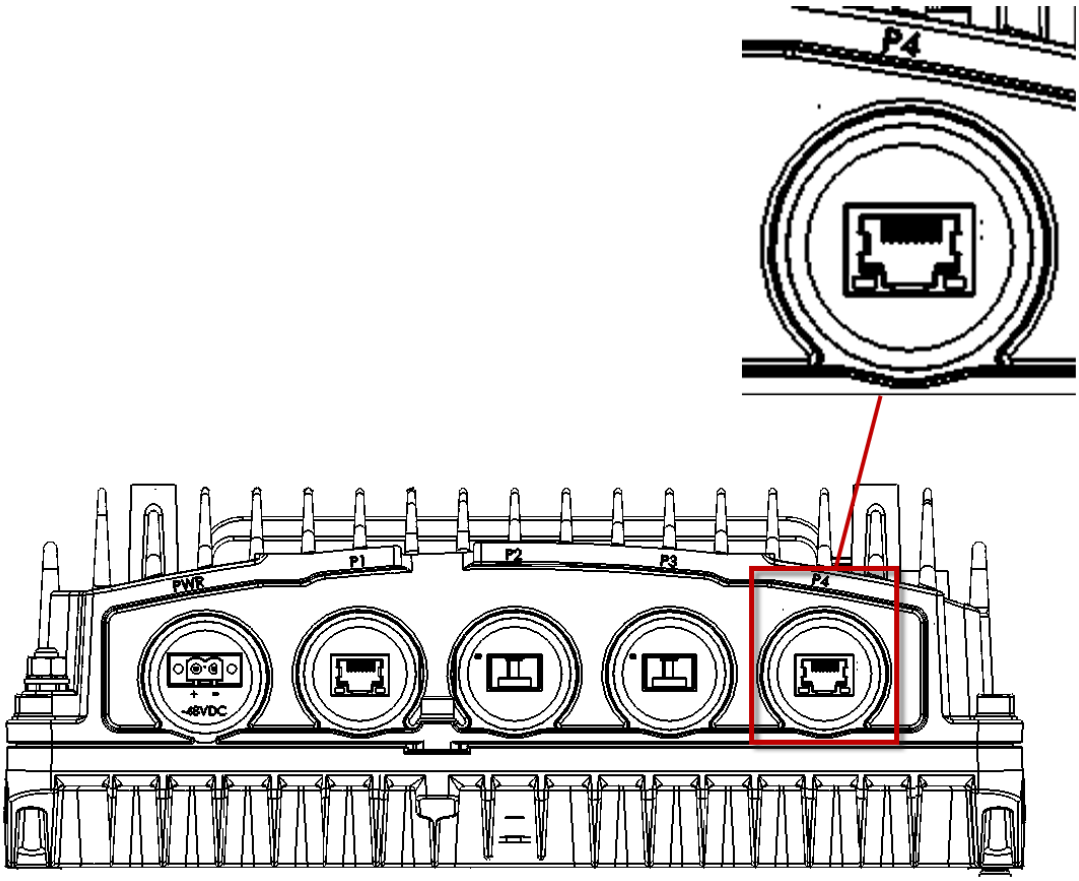

# 2+2 HSB Double Polarization Remote Mount

**Note**

This procedure can also be used for 2x 1+1 HSB DP HW ready for 2+2 HSB DP configurations.

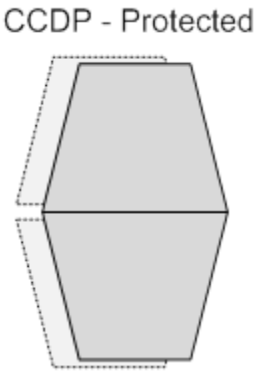


## List of Items

| Item | Description | Quantity | Model |
|---|---|---|---|
| 1 | PTP 820C HP RADIO | 2 | See Models for Radio Unit |
| 2 | PTP 820C HP Diplexer Unit | 2 | See Models for Diplexer Unit |
| 3 | PTP 820C HP OMT KIT | 1 | |
| 4 | PTP 820C HP DUAL COUPLER KIT | 1 | |
| 5 | FLEXIBLE WG KIT | 2 | |
| 6 | PTP 820C HP POLE MOUNT KIT | 1 | |
| 7 | PTP 820C HP Adaptor Remote Mount KIT | 1 | |
| 8 | CIRC./CIRC. ADAPTOR | 1 | Per Antenna Vendor. |

## Required Tools

- Metric offset hexagon key set
- Metric wrench key set
- Phillips #1, #2 screwdriver

## Procedure

1 Prior to the installation, follow the antenna manufacturer's instructions to use the circular adaptor. (Remove the existing rectangular transition, swap the O-ring, and install the circular transition instead.)

2 Connect the OMT Kit to the antenna and secure it with four screws. Verify the existence of the O-ring.

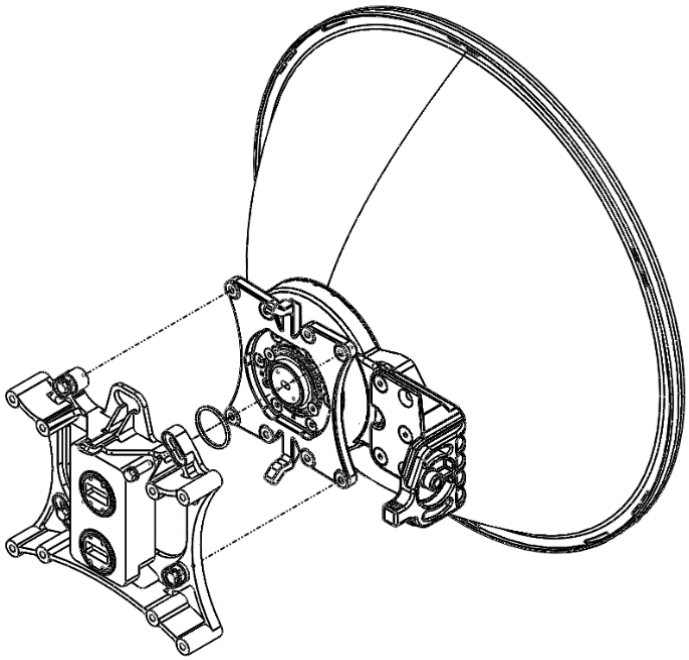

3 Mount and tighten the Remote Mount Adapter to the PTP 820C HP OMT ports using the screws supplied with the adapter kit:

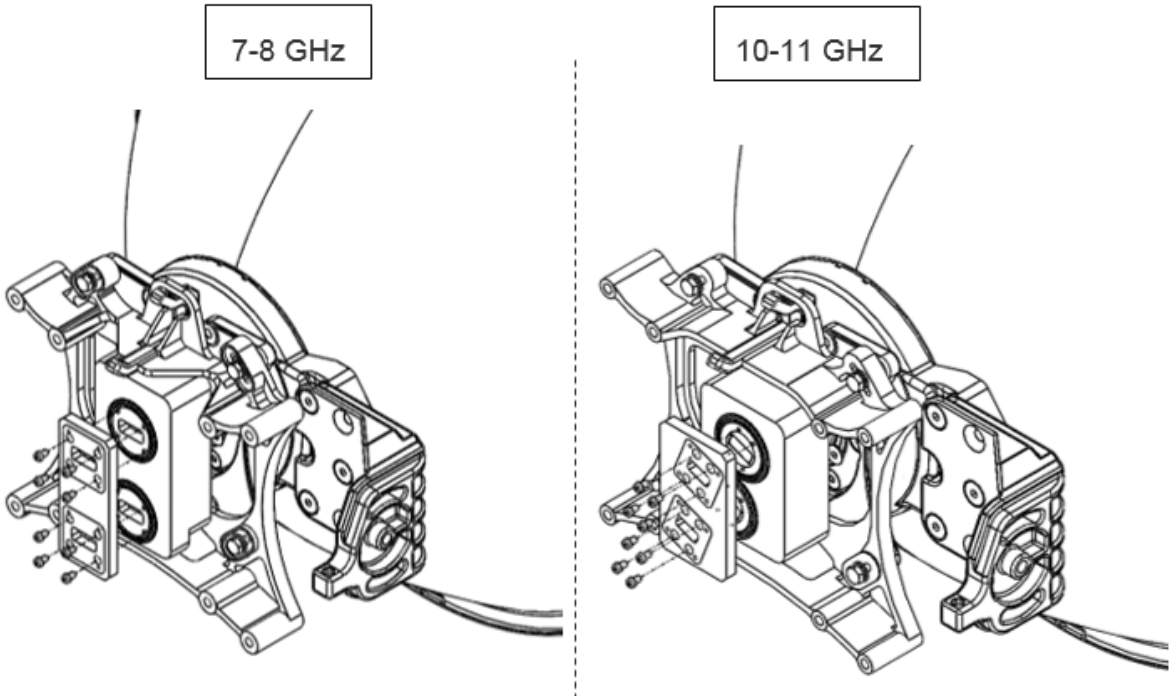


4 Mount and tighten the O-ring and the flexible waveguide to the adapter ports using the screws supplied with the flexible waveguide kit.

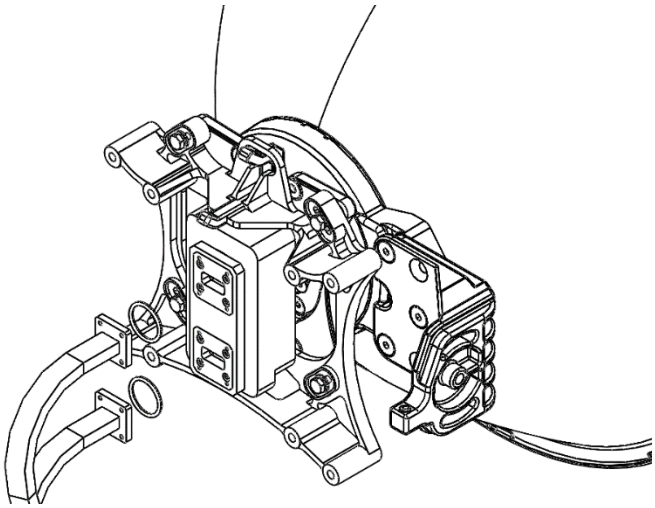

**Important:** Verify that the O-rings are correctly mounted between the OMT ports and each flexible waveguide.

5 Mount and tighten the PTP 820C HP DC pole mount to the pole using the four washers and screws supplied with the PTP 820C HP DC pole mount kit. See Steps 5 and 6 in 2+0 Dual Polarization Remote Mount.

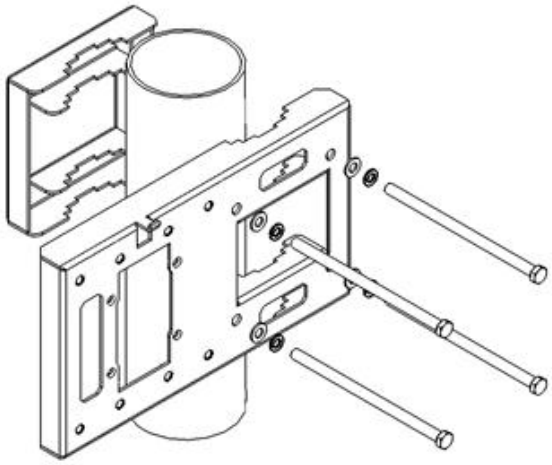

6 Mount and tighten the PTP 820C HP Remote Mount Adaptor plate (supplied inPTP 820C HP Adaptor Remote Mount kit) to the PTP 820C HP Pole Mount using the four flat screws supplied with the PTP 820C HP Adaptor Remote Mount kit.

7 Mount and tighten the PTP 820C HP Radio to the PTP 820C HP Pole Mount using the four flat screws supplied with the PTP 820C HP Radio.

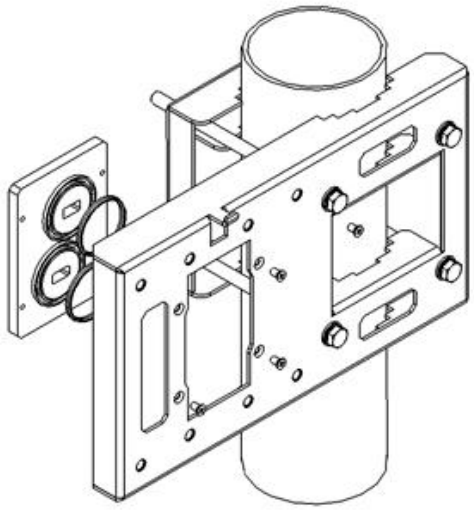

8 Mount and tighten the PTP 820C HP Dual Coupler to the PTP 820C HP Pole Mount using the four screws and washers that are supplied with the PTP 820C HP Dual Coupler kit. Pay attention that the O-rings are mounted on the PTP 820C HP Remote Mount Adaptor.

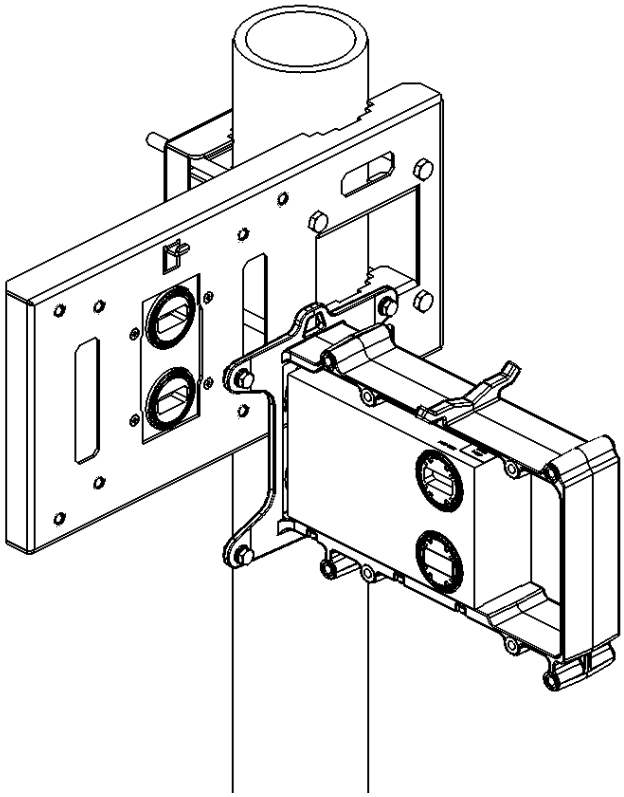

9 Mount and tighten the PTP 820C HP radios on each side of the PTP 820C HP Dual Coupler using the screws assembled on PTP 820C HP radio. Payattention that the O-rings are correctly assembled on the radio port of the PTP 820C HP Dual coupler.

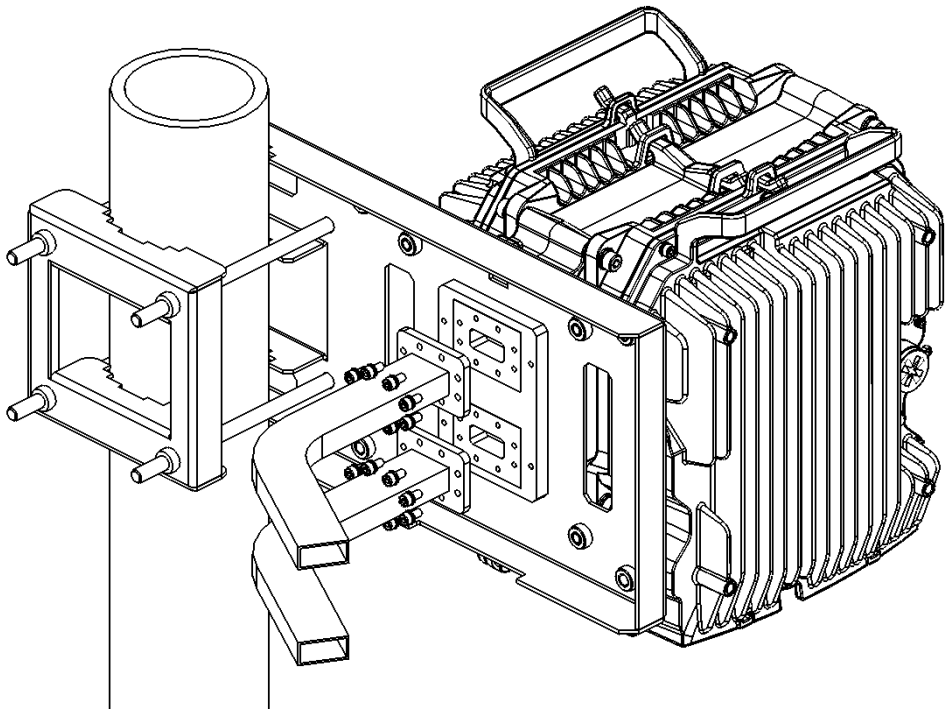

10 Connect both Flexible Waveguides and Sealing Gaskets supplied with each Flexible Waveguide Kit to the PTP 820C HP Dual Coupler antenna ports. Tighten the screws and washers supplied with the Flexible Waveguide Kit.

11 Connect the protection signaling cable between the management ports of both units. For additional instructions on preparing and connecting this cable, refer to Preparing a MIMO/Protection Signaling Cable.

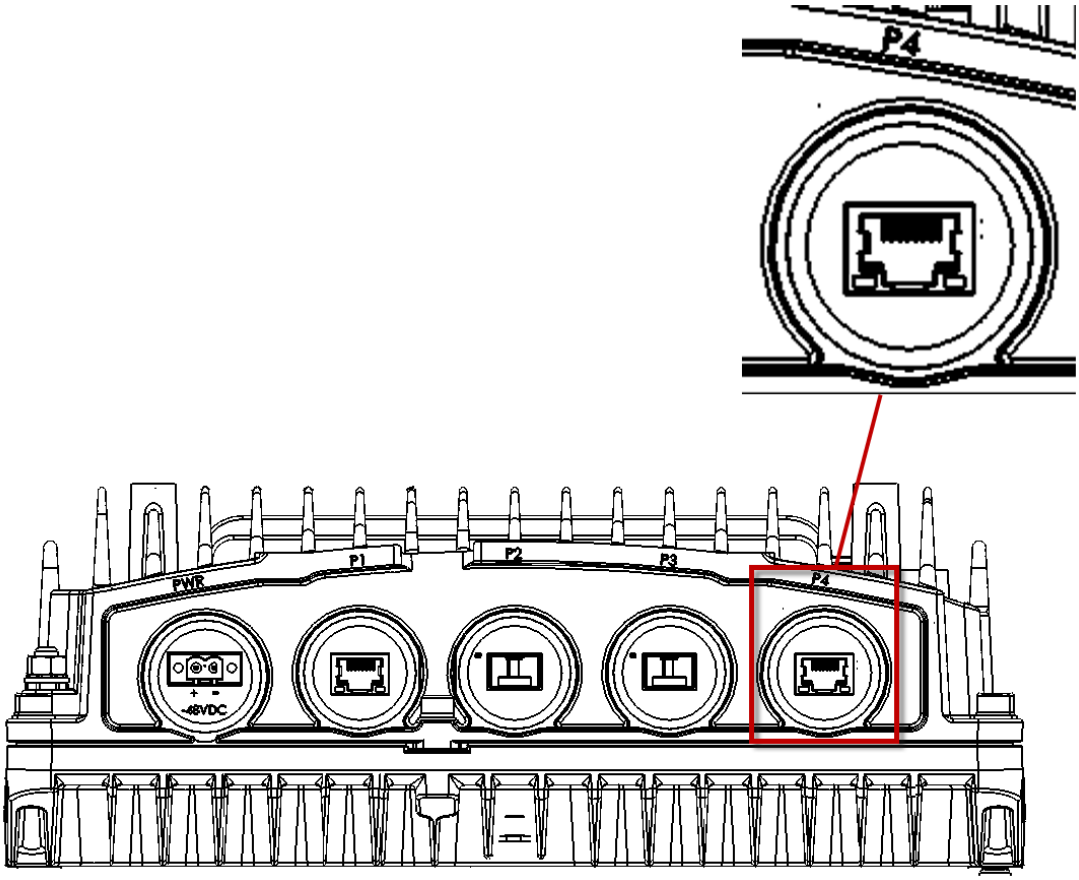

# 2+2 HSB Single Polarization Direct Mount

**Note**

This procedure can also be used for 2 x 1+1 HSB SP HW ready for 2+2 HSB SP configurations.

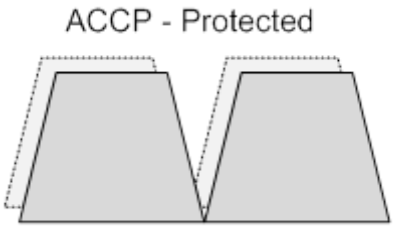


## List of Items

| Item | Description | Quantity | Model |
|---|---|---|---|
| 1 | PTP 820C HP RADIO | 2 | See Models for Radio Unit |
| 2 | PTP 820C HP Diplexer Unit | 2 | See Models for Diplexer Unit |
| 3 | PTP 820C HP SPLITTER KIT | 1 | |
| 4 | PTP 820C HP DUAL COUPLER KIT | 1 | |

## Required Tools

- Metric offset hexagon key set
- Metric wrench key set
- Phillips #1 screwdriver

## Procedure

1 Adjust the twist on the Splitter Kit. Perform one of the procedures below, according to the required polarization (horizontal or vertical).
   - o For horizontal polarization, locate the twist with the letter “H” on top.

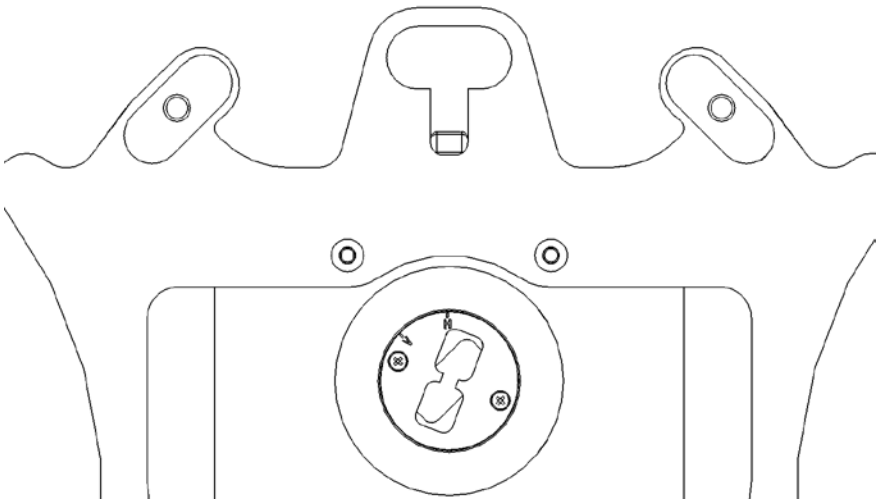

- For vertical polarization, locate the twist with the letter “V” on top.

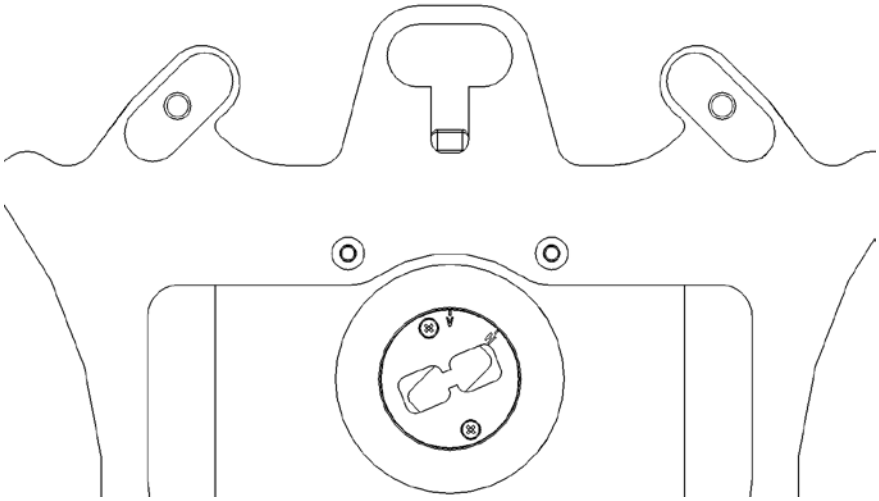

2 Mount the Splitter Kit on the antenna using four M8 screws and washers and tighten the screws.

3 Connect the PTP 820C HP Dual Coupler Kit to the Splitter Kit using four M8 screws and washers, and tighten the screws.

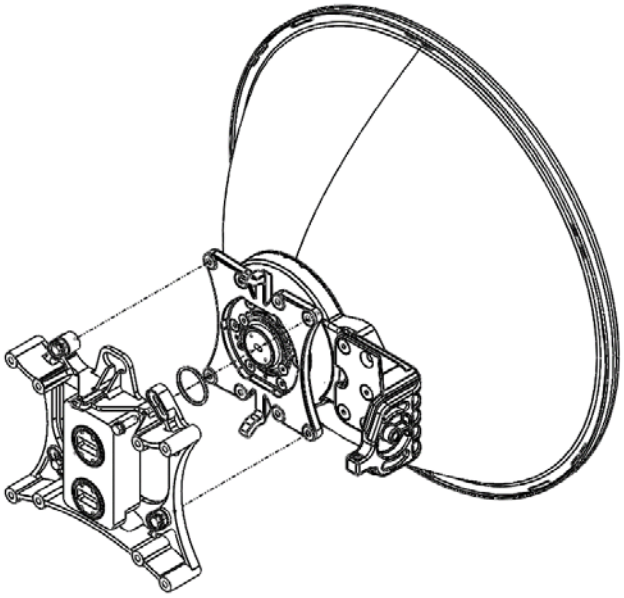

4 Mount and tighten the PTP 820C HP radio unit to both sides of the Dual Coupler Kit using the

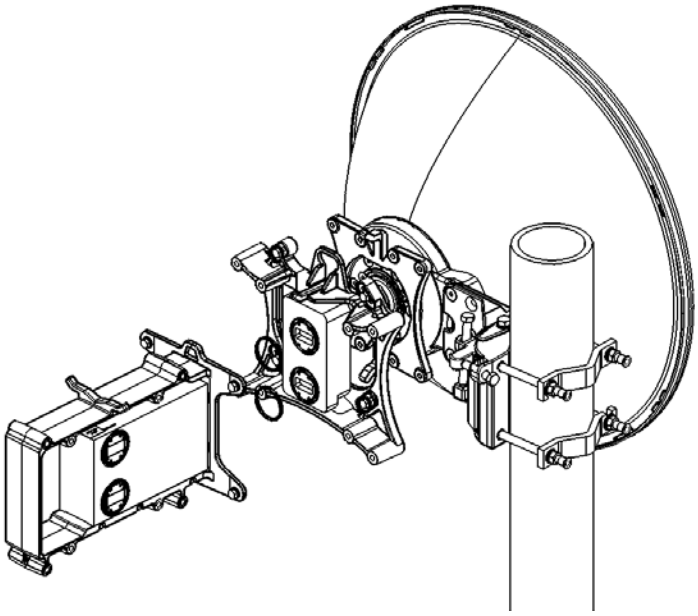

supplied captive screws and washers. Pay attention that the O-rings are correctly mounted on the radio ports of the PTP 820C HP Dual Coupler.

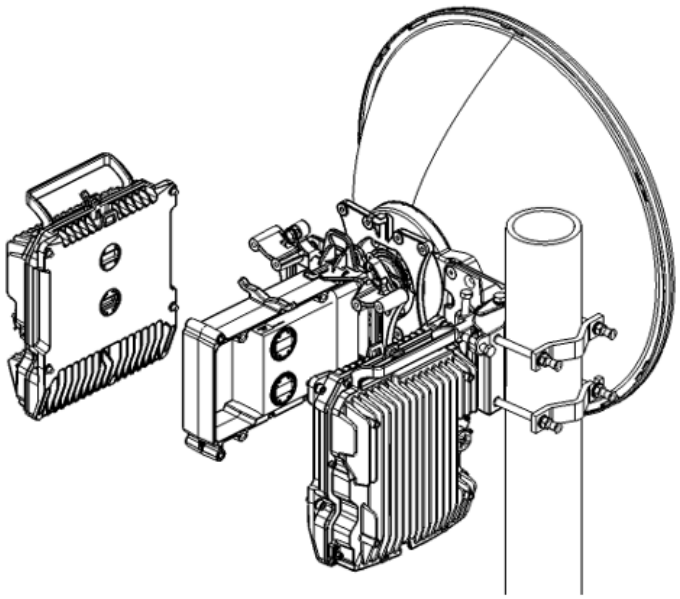

5 Connect the protection signaling cable between the management ports of both units. For additional instructions on preparing and connecting this cable, refer to Preparing a MIMO/Protection Signaling Cable.

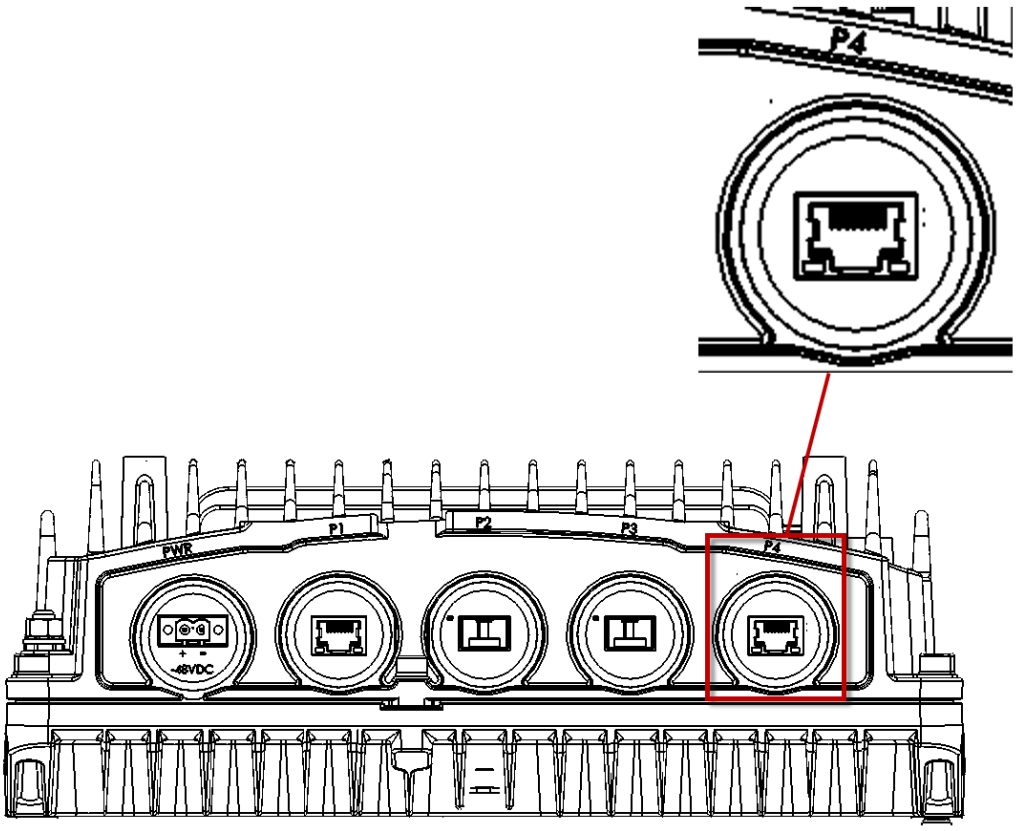

# 2 x 2+0 Dual Polarization Direct Mount

**Note**

This procedure can also be used for 2+0 DP HW ready for 2 x 2+0 DP configurations.

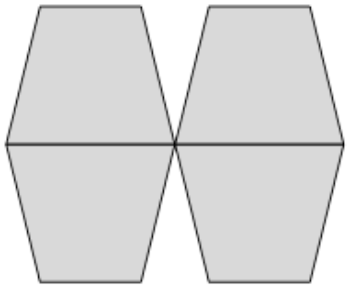

## List of Items

| Item | Description | Quantity | Model |
|---|---|---|---|
| 1 | PTP 820C HP RADIO | 2 | See Models for Radio Unit |
| 2 | PTP 820C HP Diplexer Unit | 2 | See Models for Diplexer Unit |
| 3 | PTP 820C HP OMT KIT | 1 | |
| 4 | PTP 820C HP DUAL COUPLER or SPLITTER KIT | 1 | |
| 5 | CIRC./CIRC. ADAPTOR | 1 | Per Antenna Vendor |

## Required Tools

- Metric offset hexagon key set
- Metric wrench key set

## Procedure

1 Prior to the installation, follow the antenna manufacturer's instructions to use the circular adaptor. (Remove the existing rectangular transition, swap the O-ring, and install the circular transition instead.)

2 Connect the PTP 820C HP OMT Kit to the antenna and secure it with four screws. Verify existence of the O-ring.

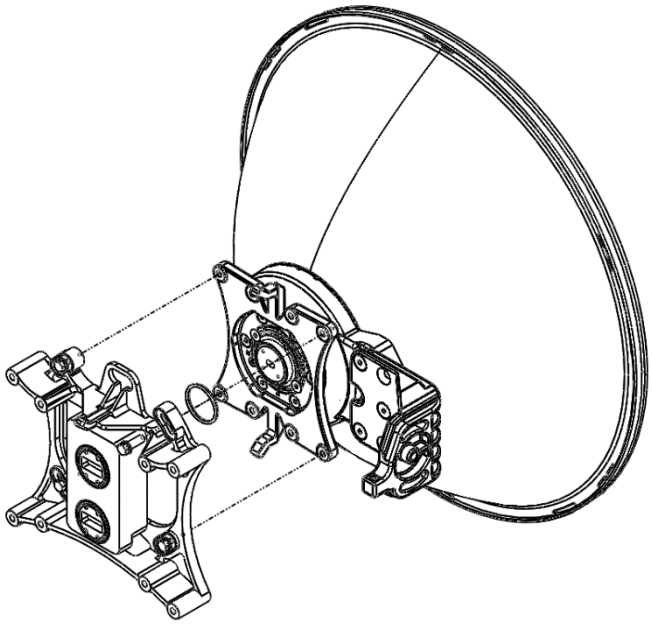

3 Connect the PTP 820C HP Dual Coupler Kit to the OMT Kit using four M8 screws and washers, and tighten the screws.

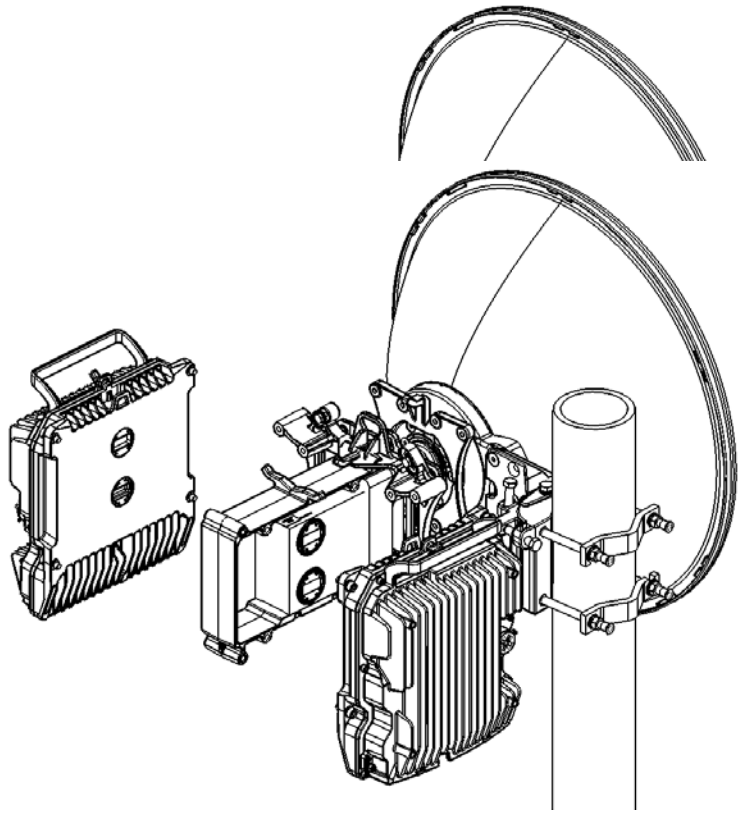

4 Mount and tighten the PTP 820C HP DC radio unit to both sides of the Dual Coupler Kit using the supplied captive screws and washers. Pay attention that the O-rings are correctly mounted on the radio ports of the PTP 820C HP Dual Coupler.

# 2 x 2+0 Dual Polarization Remote Mount

**Note**

This procedure can also be used for 2 x 1+0 DP HW ready for 2 x 2+0 DP configurations.

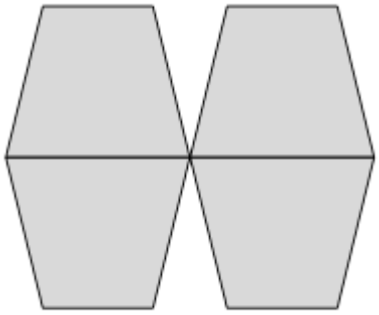

## List of Items

| Item | Description | Quantity | Models |
|---|---|---|---|
| 1 | PTP 820C HP RADIO | 2 | See Models for Radio Unit |
| 2 | PTP 820C HP Diplexer Unit | 2 | See Models for Diplexer Unit |
| 3 | PTP 820C HP OMT KIT | 1 | |
| 4 | PTP 820C HP DUAL COUPLER OR DUAL SPLITTER KIT | 1 | |
| 5 | FLEXIBLE WG KIT | 2 | |
| 6 | PTP 820C HP DC POLE MOUNT KIT | 1 | |
| 7 | PTP 820C HP DC REMOTE MOUNT ADAPTOR KIT | 1 | |
| 8 | CIRC./CIRC. ADAPTOR | 1 | Per Antenna Vendor |

## Required Tools

- Metric offset hexagon key set

- Metric wrench key set
- Phillips #1, #2 screwdriver

## Procedure

1 Prior to the installation, follow the antenna manufacturer's instructions to use the circular adaptor. (Remove the existing rectangular transition, swap the O-ring, and install the circular transition instead.)

2 Connect the OMT kit to the antenna and secure it with four screws.

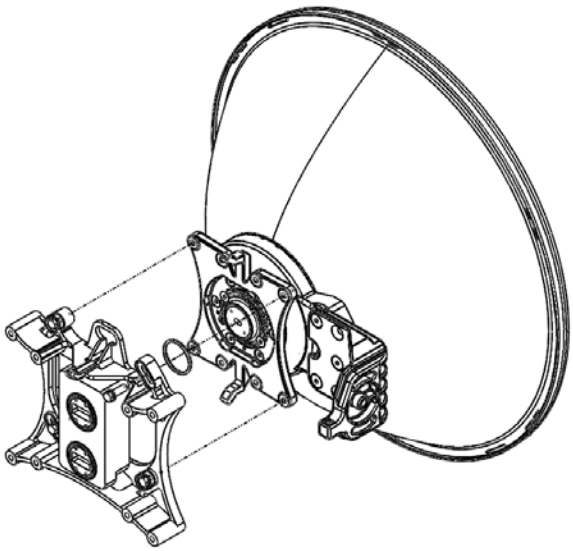

**Important:** Verify that the O-ring is properly mounted between the antenna transition and the OMT.

3 Mount and tighten the appropriate adapter to the PTP 820C HP OMT ports using the screws supplied with the adapter kit:
    - For 6 GHz, there are two adaptors:

Figure 36 6 GHz – Mounting the First Adaptor

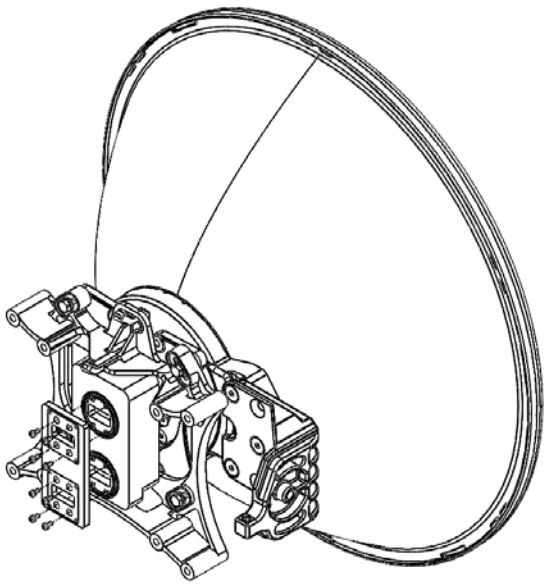

Figure 37 6 GHz – Mounting the Second Adaptor

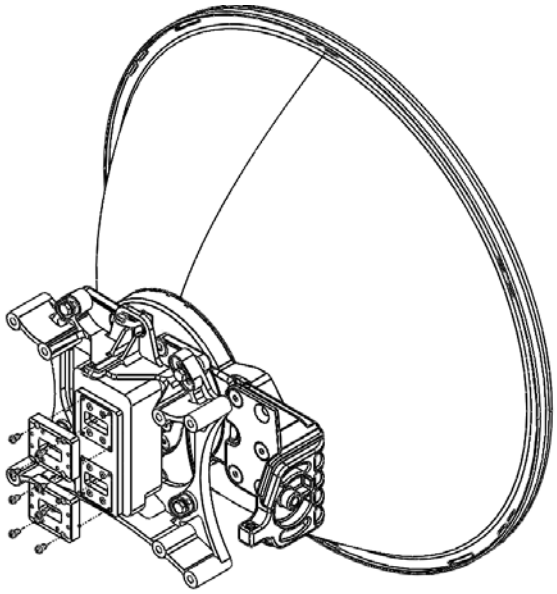

- For 7, 8, 10, and 11 GHz, there is a single adaptor:

Figure 38 Mounting the Single Adaptor for 7, 8, 10, and 11 GHz

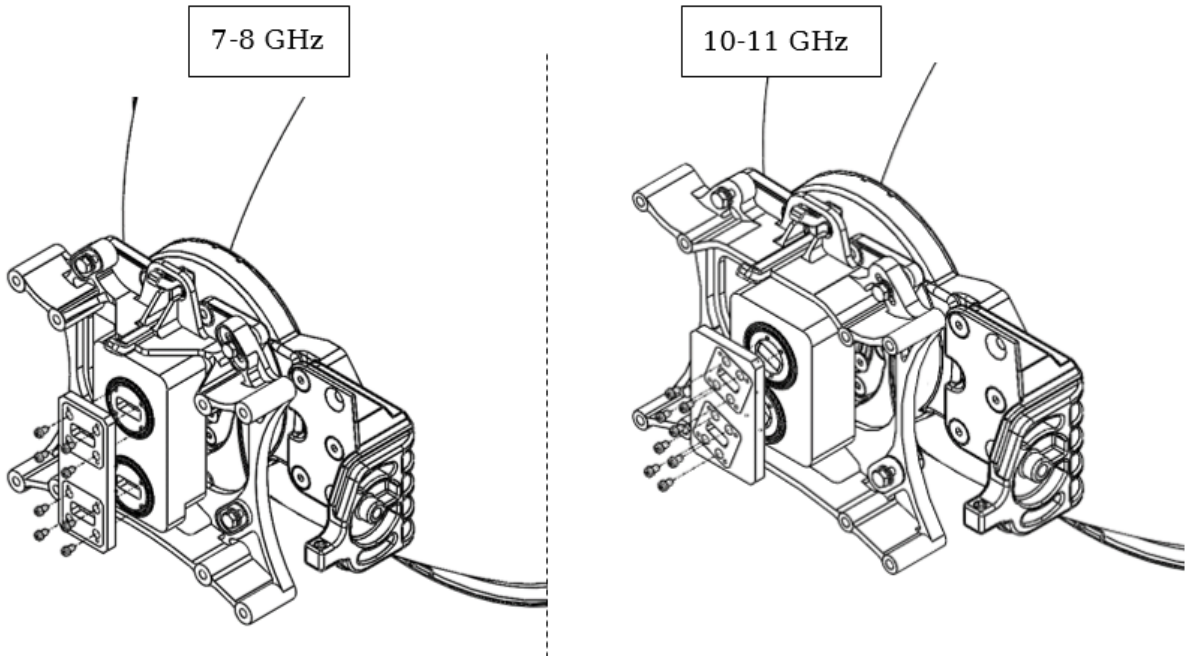


4 Mount and tighten the O-ring and the flexible waveguide to the adapter ports using the screws supplied with the flexible waveguide kit.

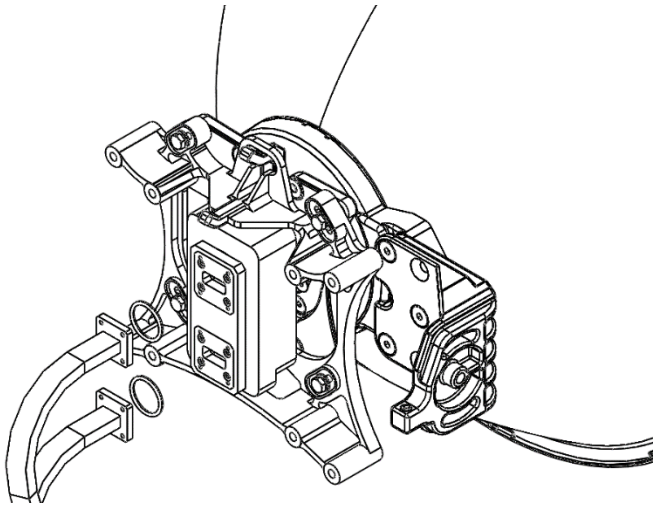

**Important:** Verify that the O-rings are correctly mounted between the OMT ports and each flexible waveguide.

5 Mount and tighten the PTP 820C HP DC pole mount to the pole using the four washers and screws supplied with the PTP 820C HP DC pole mount kit.

6 Mount and tighten the PTP 820C HP Remote Mount Adaptor plate (supplied in PTP 820C HP

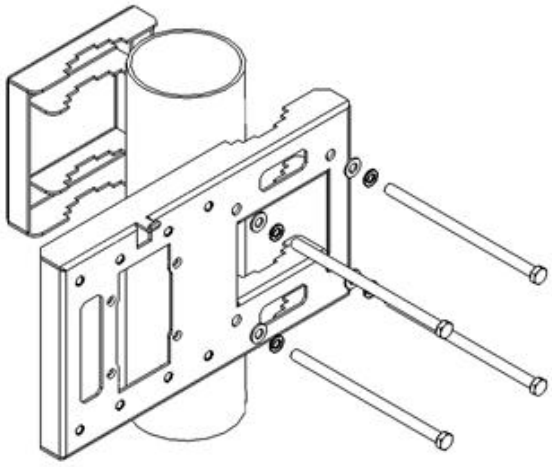

Adaptor Remote Mount kit) to the PTP 820C HP Pole Mount using the four flat screws supplied with the PTP 820C HP Adaptor Remote Mount kit.

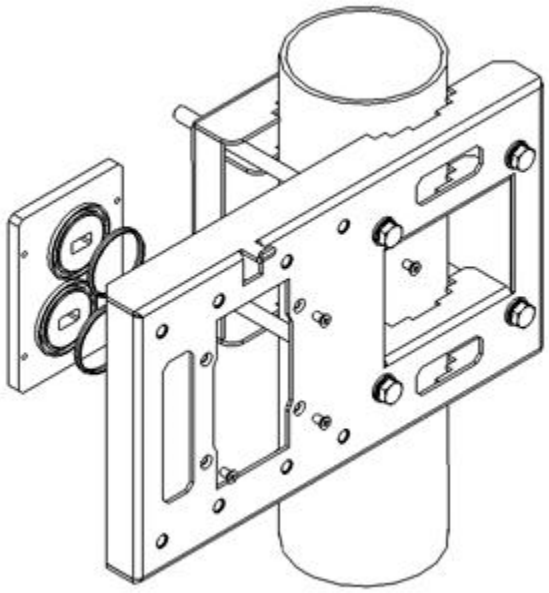

7 Mount and tighten the PTP 820C HP Radio to the PTP 820C HP Pole Mount using the four flat screws supplied with the PTP 820C HP Radio.

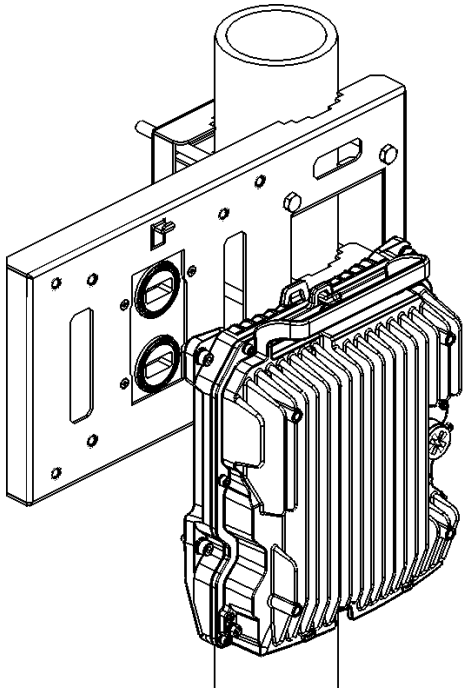

# 2 x 2+0 Single Polarization Direct Mount

**Note**

This procedure can also be used for 2 x 1+0 SP HW ready for 2 x 2+0 SP configurations.

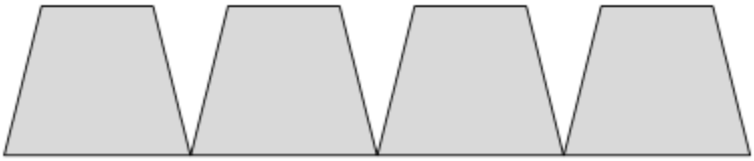

## List of Items

| Item | Description | Quantity | Model |
|---|---|---|---|
| 1 | PTP 820C HP RADIO | 2 | See Models for Radio Unit. |
| 2 | PTP 820C HP Diplexer Unit | 2 | See Models for Diplexer Unit |
| 3 | PTP 820C HP Splitter Kit | 1 | |
| 4 | PTP 820C HP Dual Splitter Kit | 1 | |

## Required Tools

- Metric offset hexagon key set
- Metric wrench key set
- Phillips #1 screwdriver

## Procedure

1 Adjust the twist on the Splitter Kit. Perform one of the procedures below, according to the required polarization (horizontal or vertical).
   - For horizontal polarization, locate the twist with the letter “H” on top.

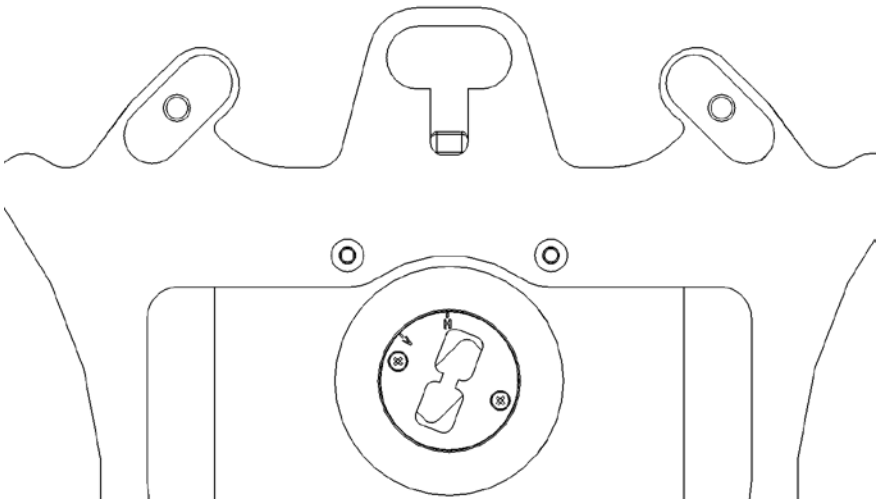

- For vertical polarization, locate the twist with the letter “V” on top.

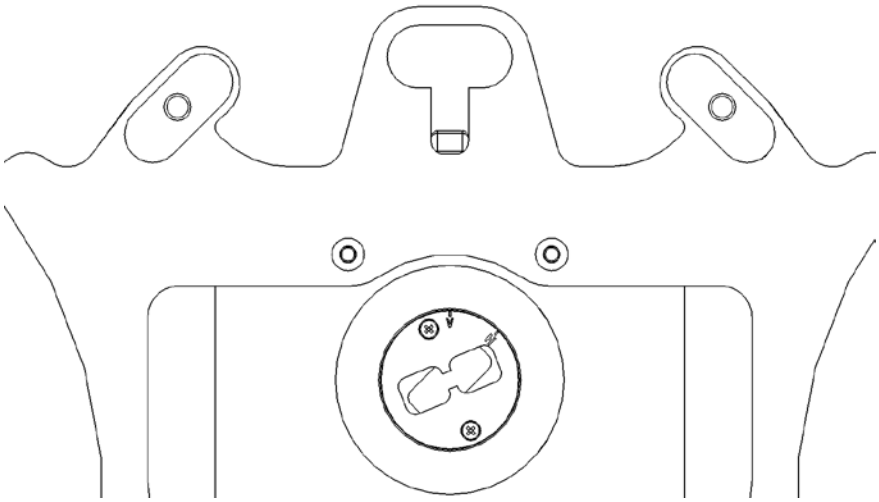

2 Mount the Dual Core Kit on the antenna using four M8 screws and washers and tighten the screws.

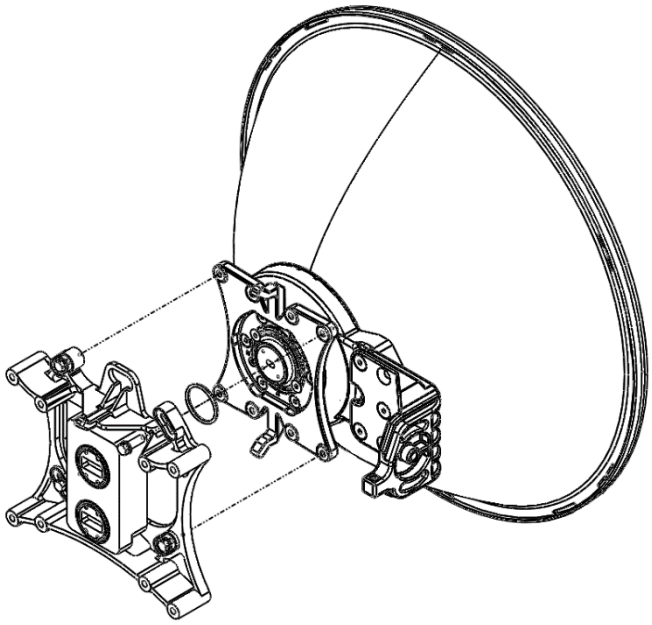

3 Connect the PTP 820C HP Dual Coupler Kit to the Splitter Kit using four M8 screws and washers, and tighten the screws.

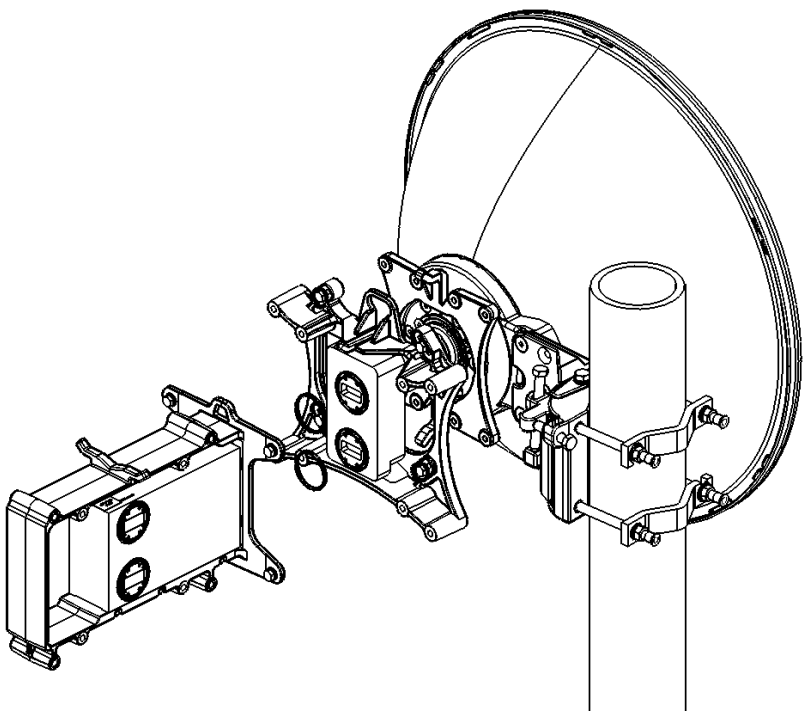

4 Mount and tighten the PTP 820C HP DC radio unit to both sides of the Dual Coupler Kit using the supplied captive screws and washers. Pay attention that the O-rings are correctly mounted on the radio ports of the PTP 820C HP Dual Coupler.

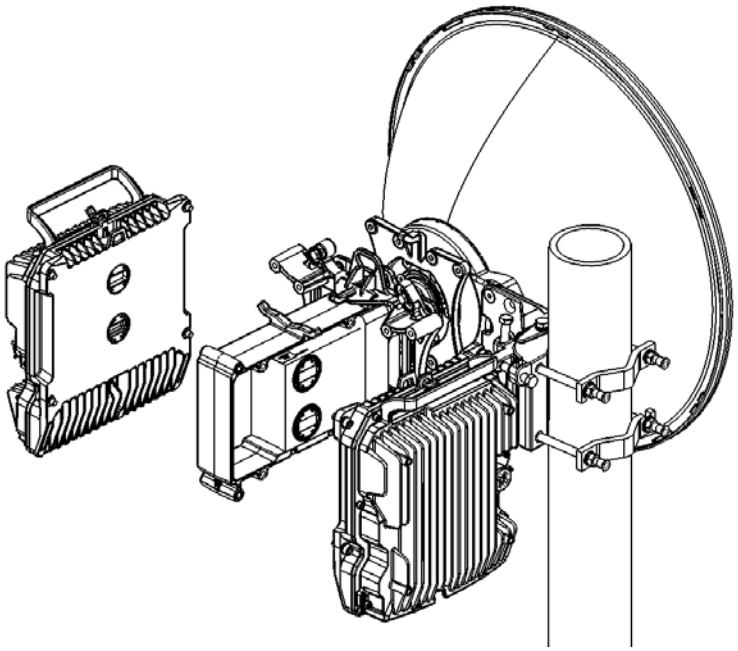

# 2+2 HSB Single Polarization Remote Mount

**Note**

This procedure can also be used for 1+1HSB SP HW ready for 2+2HSB SP configurations.

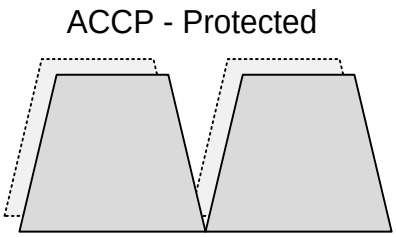


**List of Items**

| Item | Description | Quantity | Model |
|---|---|---|---|
| 1 | PTP 820C HP RADIO | 2 | See Models for Radio Unit |
| 2 | PTP 820C HP Diplexer Unit | 2 | See Models for Diplexer Unit |
| 3 | Adaptor Remote Mount Kit | 1 | |
| 4 | PTP 820C HP SPLITTER KIT | 1 | |
| 5 | PTP 820C HP DUAL COUPLER KIT | 1 | |
| 6 | FLEXIBLE WG KIT | 2 | |
| 7 | RFU-C POLE MOUNT KIT | 2 | |

## Required Tools

- Metric offset hexagon key set
- Metric wrench key set
- Phillips #1, #2 screwdriver

### Procedure

1 Mount and tighten the PTP 820C HP Remote Mount Adaptor plate (supplied in the PTP 820C HP Adaptor Remote Mount kit) to the PTP 820C HP Pole Mount using the four flat screws supplied with the PTP 820C HP Adaptor Remote Mount kit.

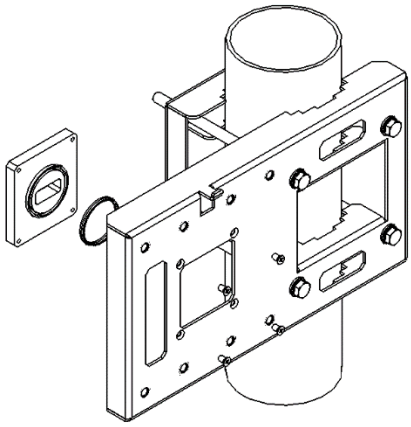

2 Mount and tighten the PTP 820C HP Splitter to the PTP 820C HP Pole Mount using the four captive screws and washers that are assembled to the PTP 820C HP Splitter kit.

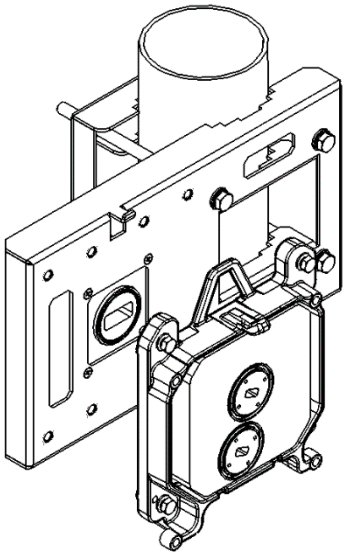

3 Mount and tighten the PTP 820C HP Dual Coupler to the PTP 820C HP Splitter using the four captive screws and washers that are supplied with the PTP 820C HP Dual Coupler kit. Make sure that the O-rings are mounted on the PTP 820C HP Splitter.

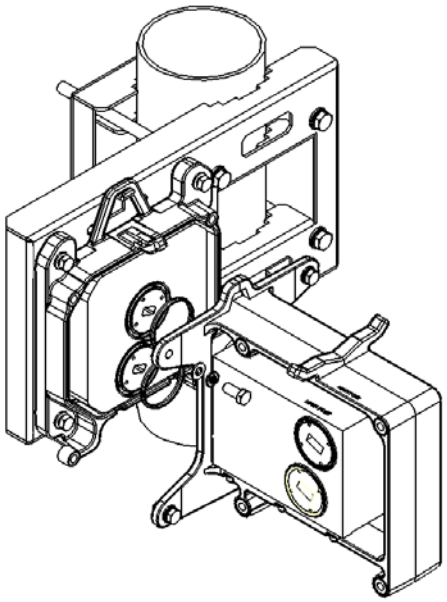

4 Attach the Diplexer unit to the Dual Coupler using 8 M4 screws provided with the Diplexer kit, as shown below, using 20Nm torque.

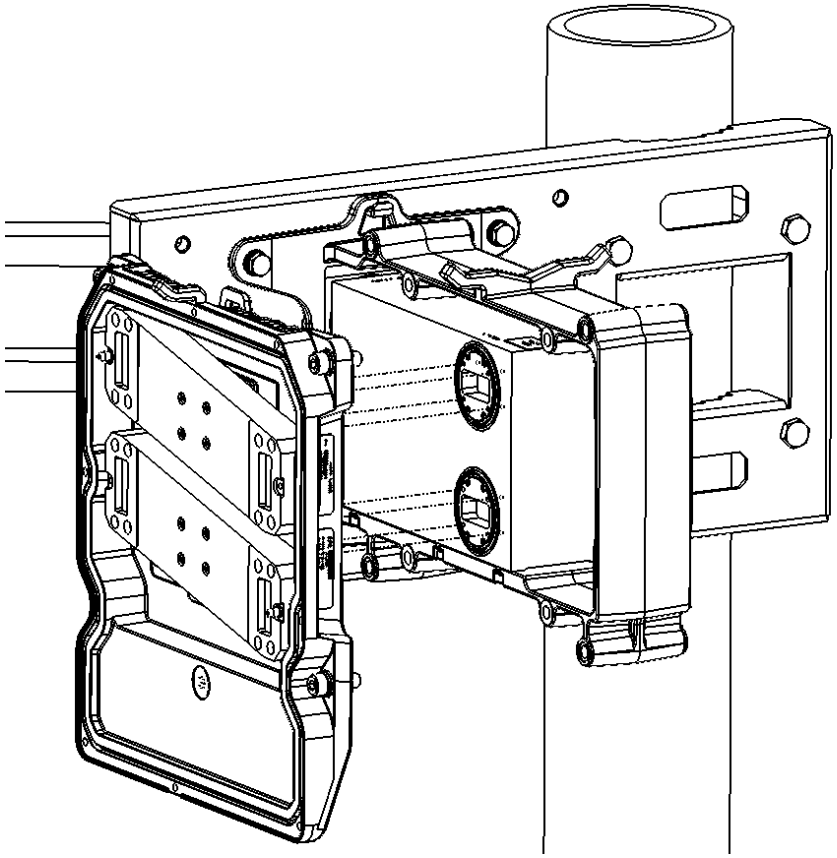

**Note**

Tighten the screws diagonally. First begin to fasten the upper right screw of the top Diplexer and then the lower left screw of the bottom Diplexer, then fasten the upper left screw of the top Diplexer and then the lower right screw of the bottom Diplexer. Once the outer screws have all been partially tightened, repeat this process in a similar fashion with the central screws. Then proceed to fully tighten all the screws in the same order.

**Important:** Verify that the O-rings on the Dual Coupler are properly mounted between the Dual Coupler ports and the Diplexer unit.

5 Secure the edges of the Diplexer unit to the Dual Coupler using the four M8 captive screws and washers supplied with the Diplexer kit, using 20Nm torque. These screws are colored blue in the following picture. Be sure to tighten the screws in the same diagonal manner as in the previous step.

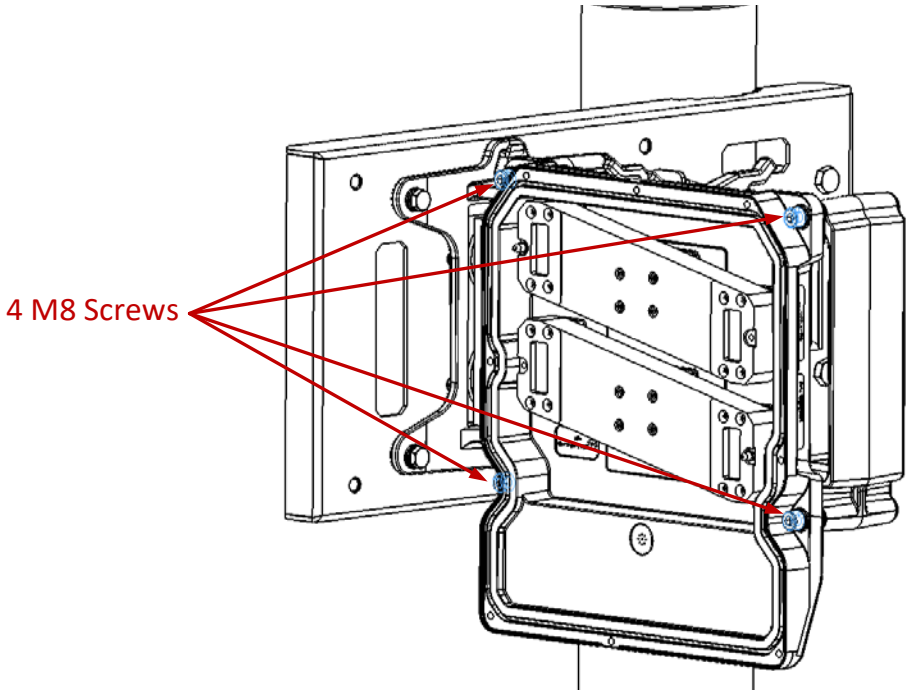


6 Attach the Radio unit to the Diplexer unit using the 8 M5 captive screws supplied with the Radio kit. Position the Radio unit on the Diplexer unit so that the two location pins mounted on the TRX ports of the Diplexer unit fit into the corresponding holes in the Radio unit. Perform the fastening in diagonal fashion as in the previous steps. The location pins are located on either the left of the upper TRX port and the right of the lower TRX port or the right of the upper TRX port and the left of the lower TRX port, depending on the frequency.

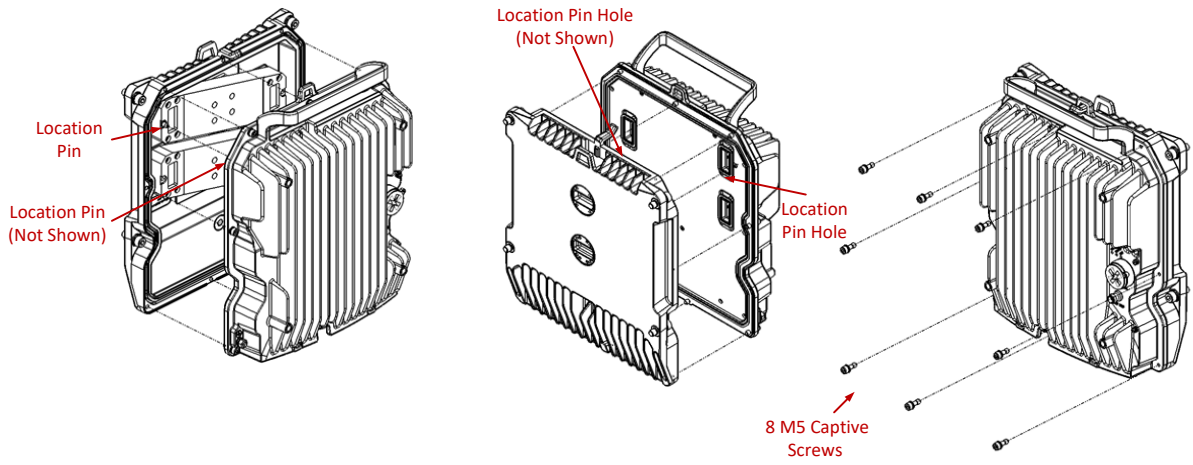


7 Repeat steps 4-6 to attach the second Diplexer unit and the second Radio unit to the other side of the Dual Coupler, Dual Splitter, or Dual Circulator.

1 Connect the Flexible Waveguide and Sealing Gasket supplied with the Flexible Waveguide kit to the RFU-C Adaptor plate. Tighten the four screws supplied with the Flexible Waveguide kit.

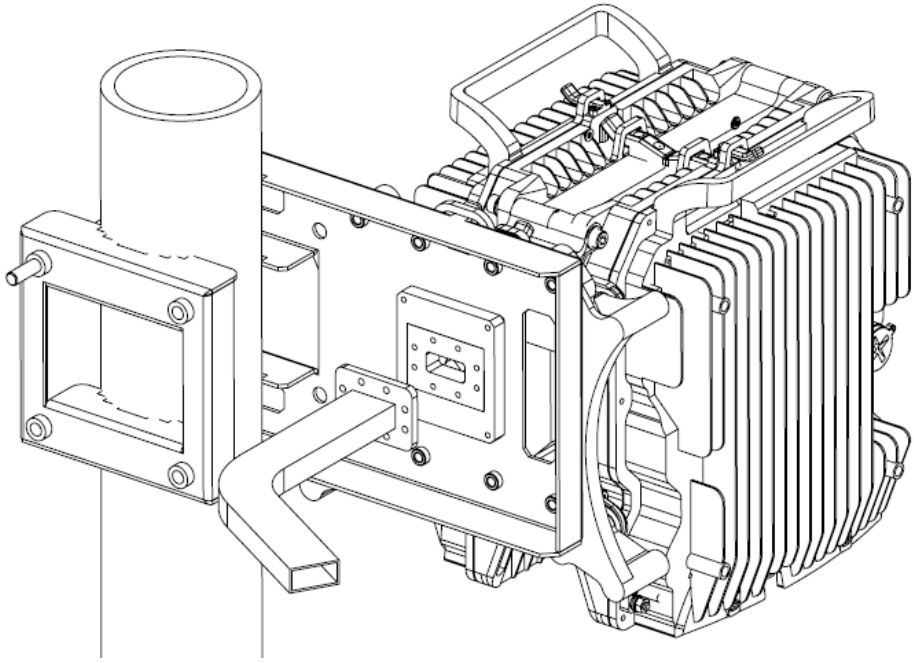

# 2x2 LoS MIMO Direct Mount

**Note**

This procedure can also be used for 1+0 SD configurations.

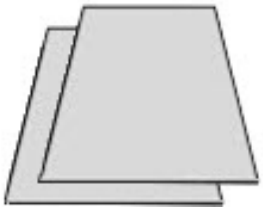

## List of Items

| Item | Description | Quantity | Model |
|---|---|---|---|
| 1 | PTP 820C HP RADIO | 1 | See Models for Radio Unit |
| 2 | PTP 820C HP Diplexer Unit | 1 | See Models for Diplexer Unit |
| 3 | PTP 820C HP Dual Core Kit | 1 | |
| 4 | Flexible WG Kit | 1 | Optional |
| 5 | Coax to WG Kit | 1 | Optional |

## Required Tools

- Metric offset hexagon key set
- Phillips #1, #2 screwdriver

## Procedure

1 Adjust the twist on the Splitter Kit. Perform one of the procedures below, according to the required polarization (horizontal or vertical).

- For horizontal polarization, locate the twist with the letter “H” on top.

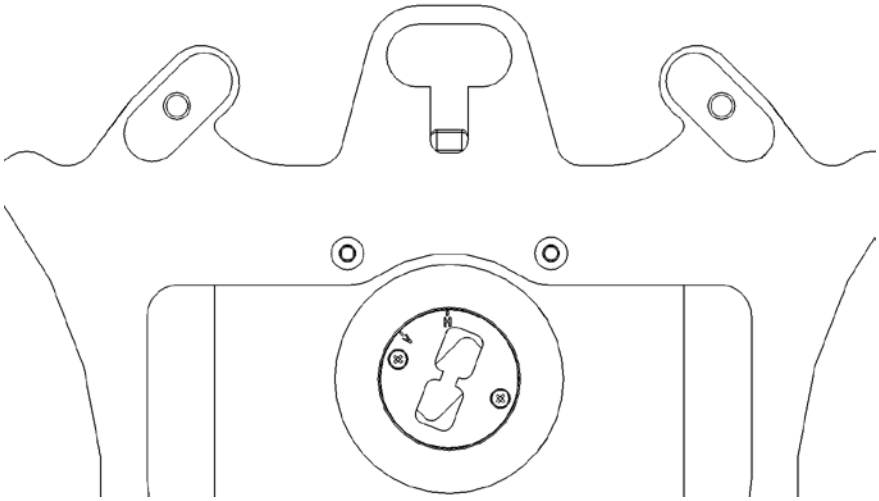

- For vertical polarization, locate the twist with the letter “V” on top.

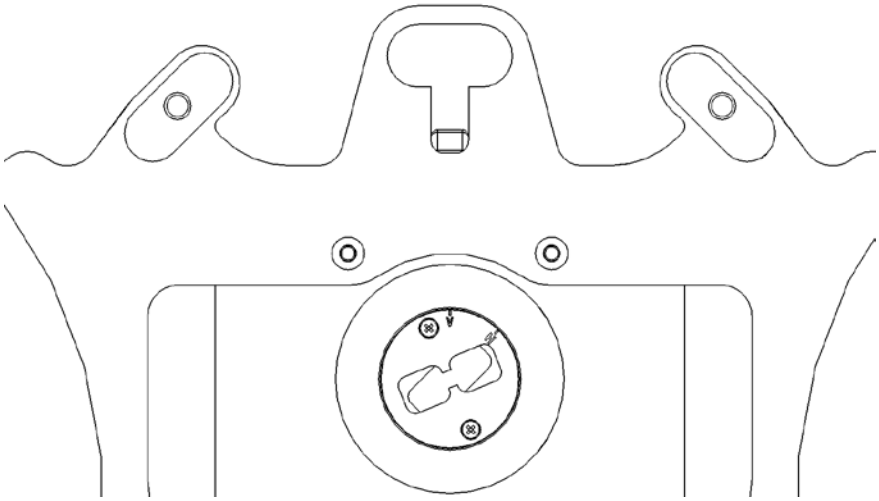

2 Mount the Splitter Kit on the antenna using four M8 screws and washers and tighten the screws.

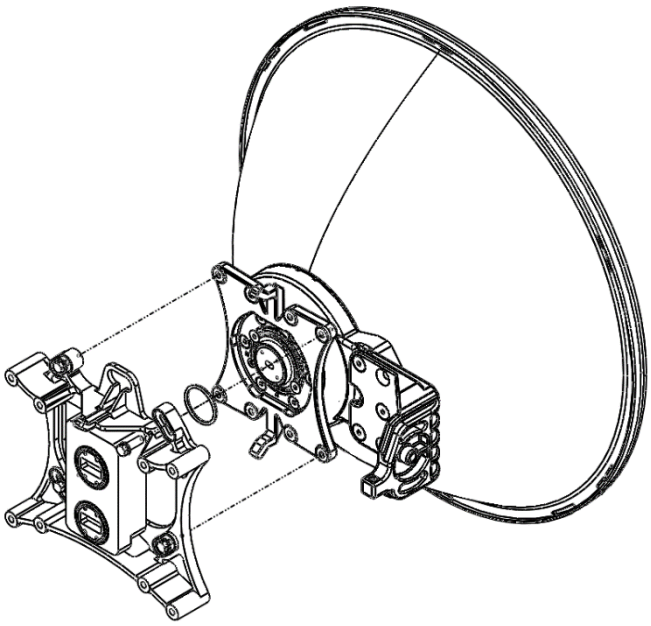

3 Connect the PTP 820C HP DC radio to the Splitter kit using the four M8 captive screws and washers supplied and tighten the screws.

**Important:** Verify that the O-rings are properly mounted between the OMT ports and the radio/dual coupler.

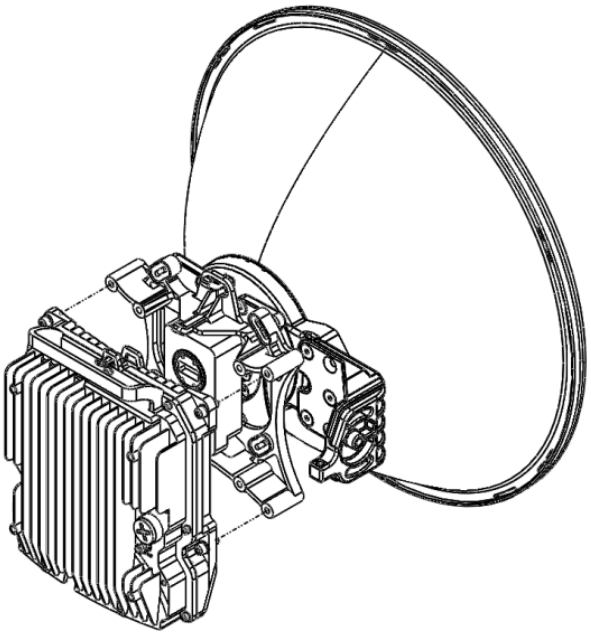

# 2x2 LoS MIMO Remote Mount

**Note**

This procedure can also be used for 1+0 SD configurations.

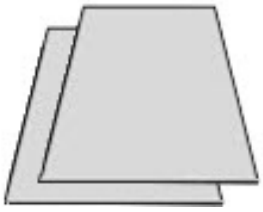

## List of Items

| Item | Description | Quantity | Model |
|---|---|---|---|
| 1 | PTP 820C HP RADIO | 1 | See Models for Radio Unit |
| 2 | PTP 820C HP Diplexer Unit | 1 | See Models for Diplexer Unit |
| 3 | PTP 820C HP DC Adaptor Remote Mount KIT | 1 | |

## Required Tools

- Metric offset hexagon key set
- Metric wrench key set

## Procedure

1 Mount and tighten the PTP 820C HP Remote Mount Adaptor plate (supplied in PTP 820C HP Adaptor Remote Mount kit) to the PTP 820C HP Pole Mount using the four flat screws supplied with the PTP 820C HP Adaptor Remote Mount kit.

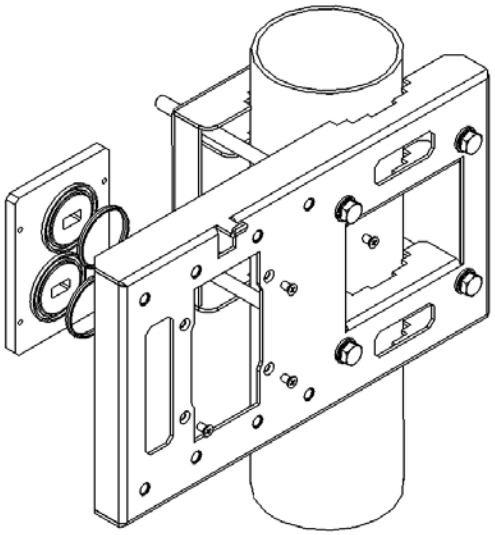

2 Mount and tighten the PTP 820C HP Radio to the PTP 820C HP Pole Mount using the four captive screws and washers that are supplied with the PTP 820C HP Radio. Pay attention that the O-rings are mounted on the PTP 820C HP Remote Mount Adaptor.

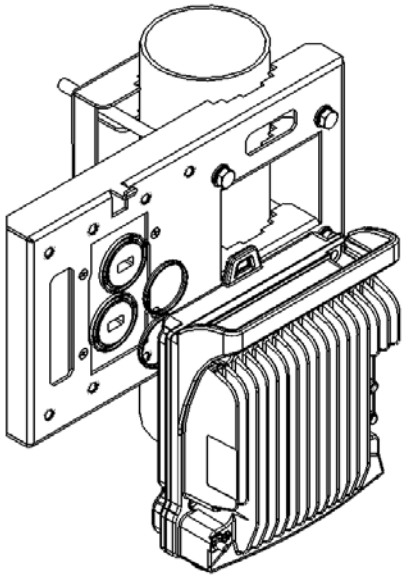

3 Mount and tighten both Flexible WGs with their O-ring to the PTP 820C HP Remote Mount Adaptor ports using the four screws supplied with each Flexible WG kit.

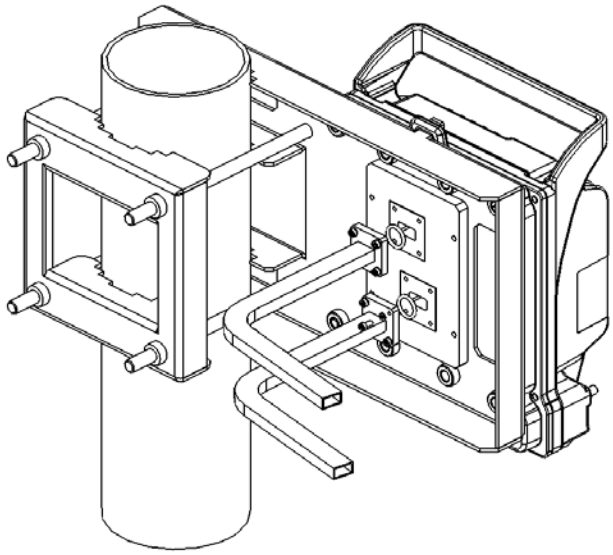

# 4x4 LoS MIMO Direct Mount

**Notes**

1) This procedure can also be used for 2+0 SP HW ready for 2 x 2+0 SP configurations.

2) This procedure can also be used for 2+2 SD configurations.

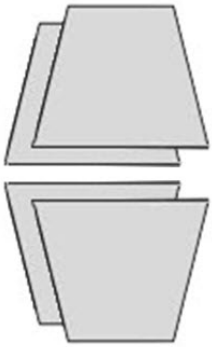

## List of Items

| Item | Description | Quantity | Model |
|---|---|---|---|
| 1 | PTP 820C HP RADIO | 2 | See Models for Radio Unit |
| 2 | PTP 820C HP Diplexer Unit | 2 | See Models for Diplexer Unit |
| 3 | PTP 820C HP OMT KIT | 2 | |
| 4 | MIMO DATA CABLE | 1 | |
| 5 | SOURCE SHARING CABLE | 1 | |
| 6 | CAT5E MIMO SIGNALING CABLE | 1 | |
| 7 | CIRC./CIRC. ADAPTOR | 1 | Per Antenna Vendor |

## Required Tools

- Metric offset hexagon key set
- Metric wrench key set

## Procedure

1 For instructions on installation of the PTP820C OMT and radios, see 2+0 Dual Polarization Direct Mount.

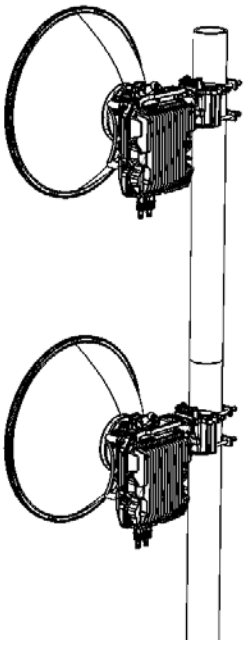

2 Connect the source sharing cable between both EXT REFPTP 820C HP radio connectors. The maximum torque for connecting this cable to the radio is 5Lb.in (0.5N.m).

3 Connect the MIMO data sharing cable between both P3PTP 820C HP ports.

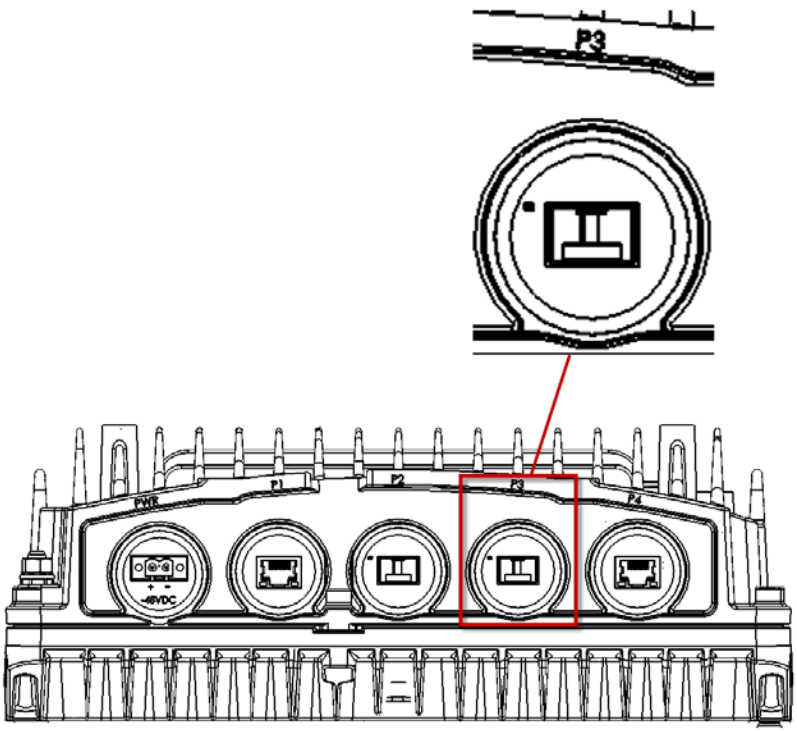

4 Connect the MIMO signaling cable between the management ports of both units. For additional instructions on preparing and connecting this cable, refer to Preparing a MIMO/Protection Signaling Cable.

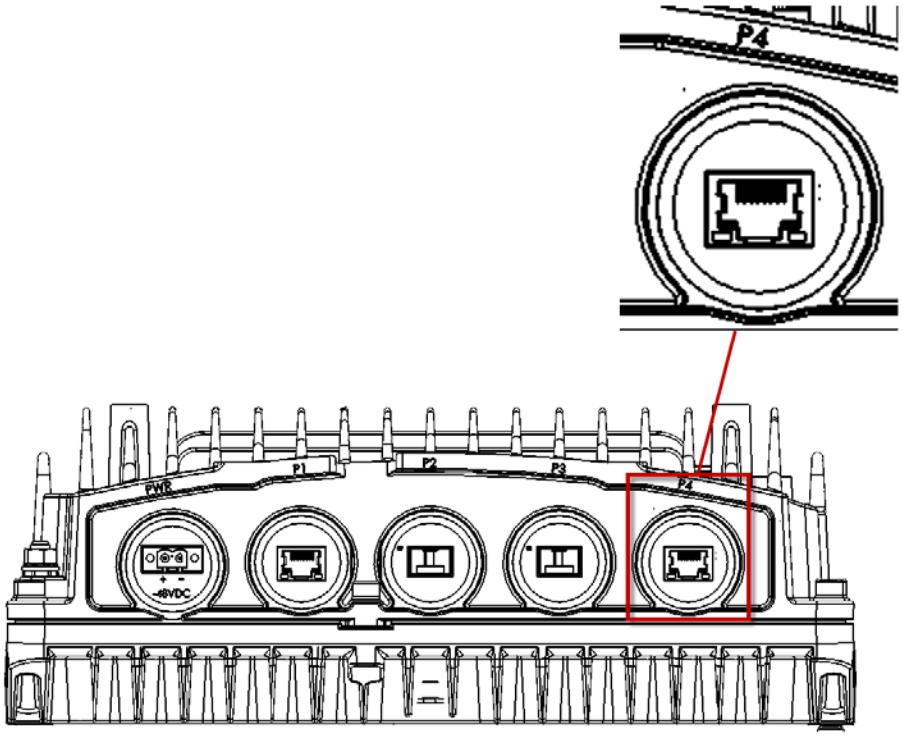

# 4+0 Single/Dual Polarization Direct Mount

## List of Items

| Item | Description | Quantity | Remarks |
|---|---|---|---|
| 1 | PTP 820C HP Radios | 2 | See Models for Radio Unit |
| 2 | PTP 820C HP Diplexer Units | 2 | See Models for Diplexer Unit |
| 3 | PTP 820C HP Dual Coupler or DualSplitter | 1 | |
| 4 | PTP 820C HP OMT/Splitter Kit | 1 | |

## Required Tools

- Metric offset hexagon key set
- Metric wrench key set

## Procedure

1 Mount the OMT (for dual polarization) or Splitter (for single polarization) to the antenna and secure it with four screws.

**Important:** Verify that the O-ring is properly mounted between the antenna transition and the OMT/Splitter.

- o If you are using a Splitter, adjust the twist on the Splitter Kit.

2 Perform one of the following steps, according to the required polarization (horizontal or vertical).

- o For horizontal polarization, locate the twist with the letter “H” on top.

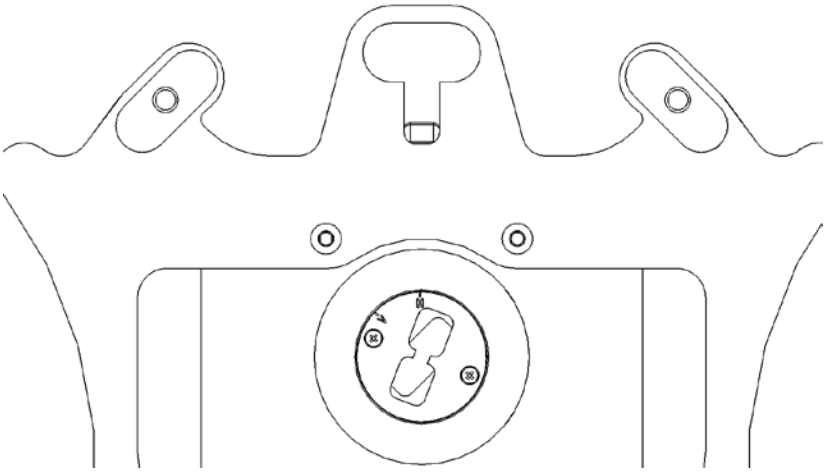

- For vertical polarization, locate the twist with the letter “V” on top.

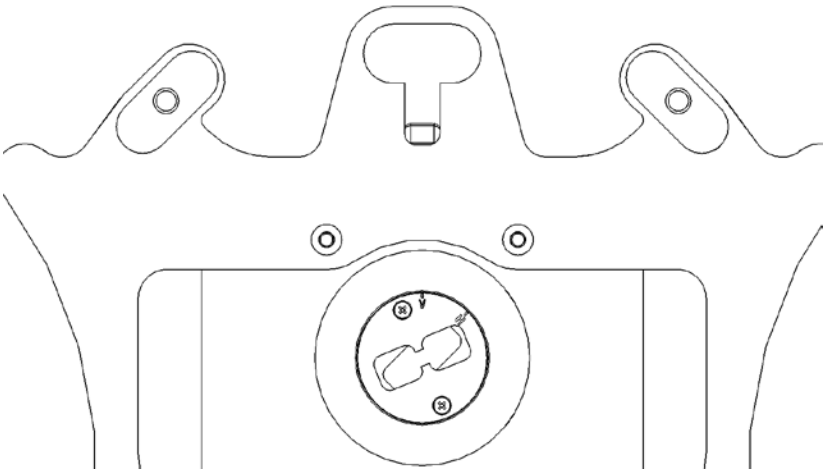

3 Mount the OMT/Splitter Kit on the antenna using four M8 screws and washers and tighten the screws.

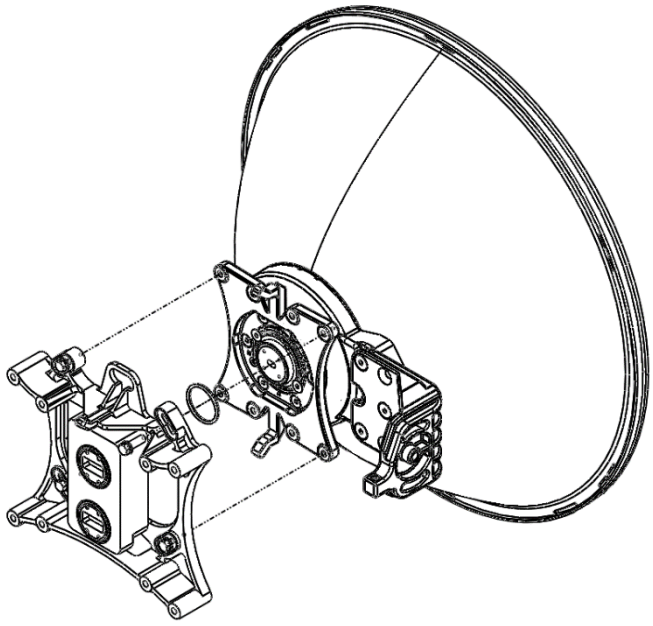

4 Connect the PTP 820C HP Dual Coupler Kit to the OMT/Splitter Kit using four M8 screws and washers, and tighten the screws.

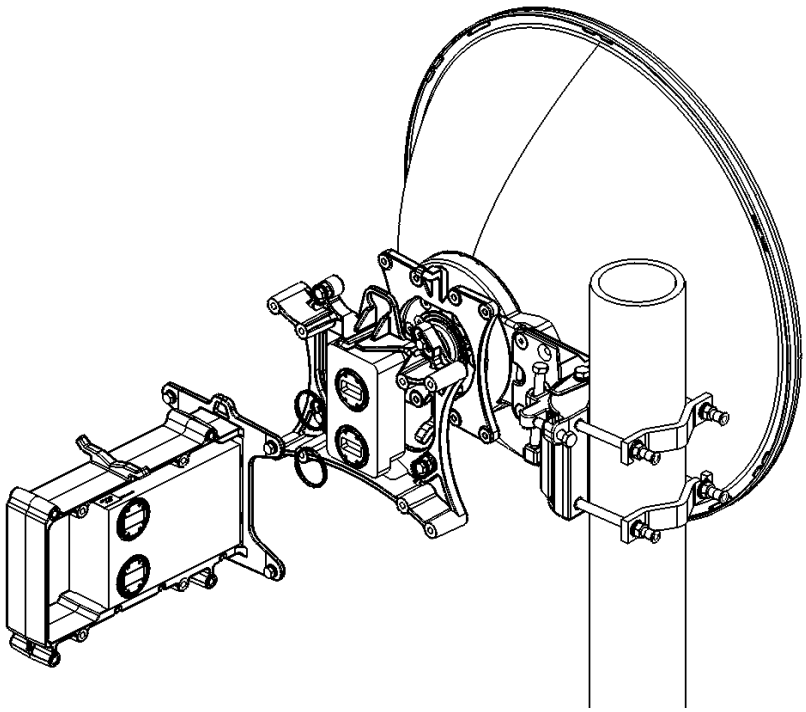

5 Mount and tighten the PTP 820C HP radio unit to both sides of the Dual Coupler Kit using the supplied captive screws and washers. Pay attention that the O-rings are correctly mounted on the radio ports of the PTP 820C HP Dual Coupler.

6 Connect the protection signaling cable between the management ports of both units. For additional instructions on preparing and connecting this cable, refer to **Preparing a MIMO/Protection Signaling Cable.**

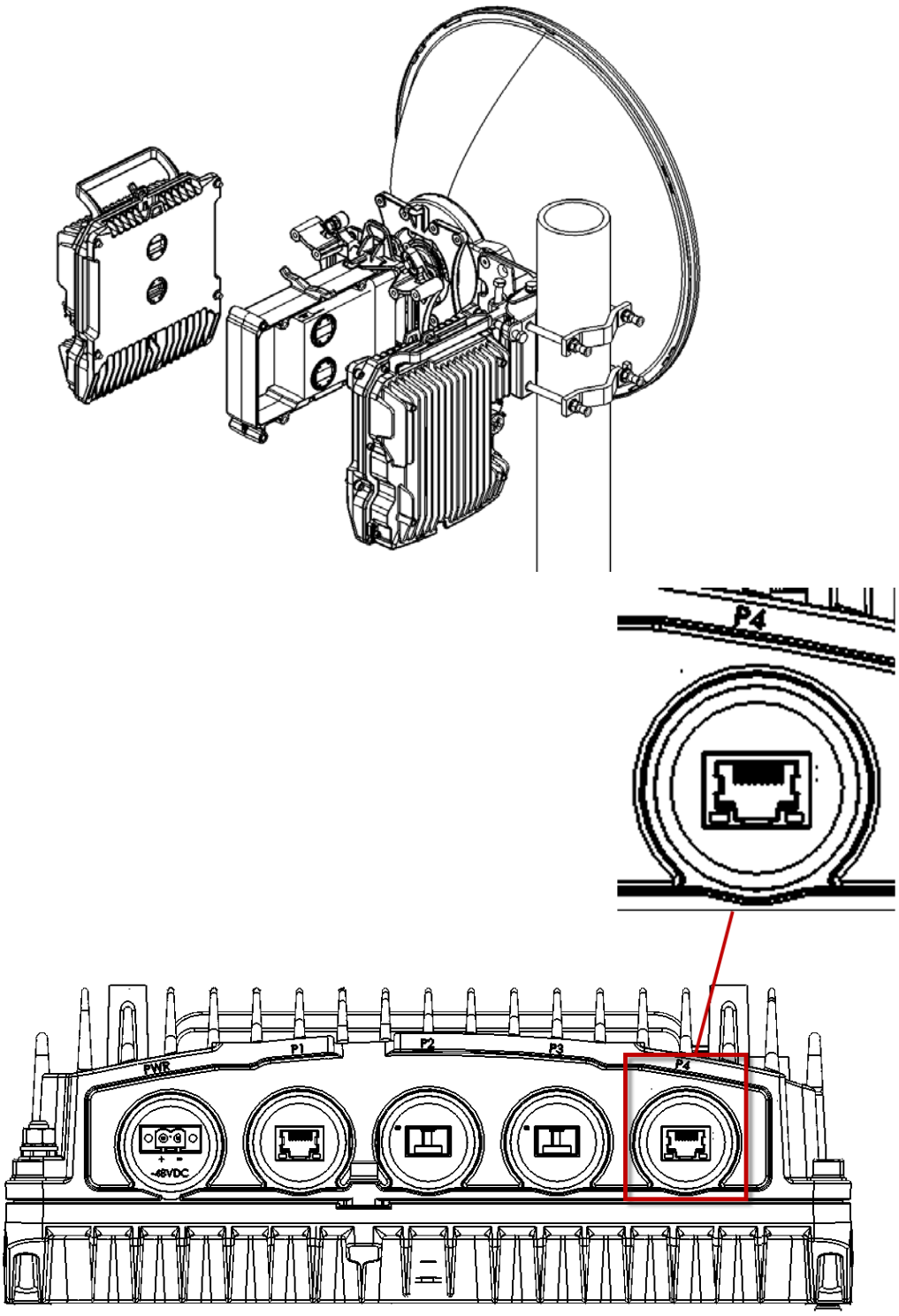

# 4+0 with Dual Circulator Direct Mount

The following example illustrates a typical configuration, assuming that:

The regulation specifies a channelization of 8 consecutive 28/38MHz channels (1-8 ch).

The actual channels in use are channels 1,5.

Figure 39 4+0 with Dual Circulator Direct Mount

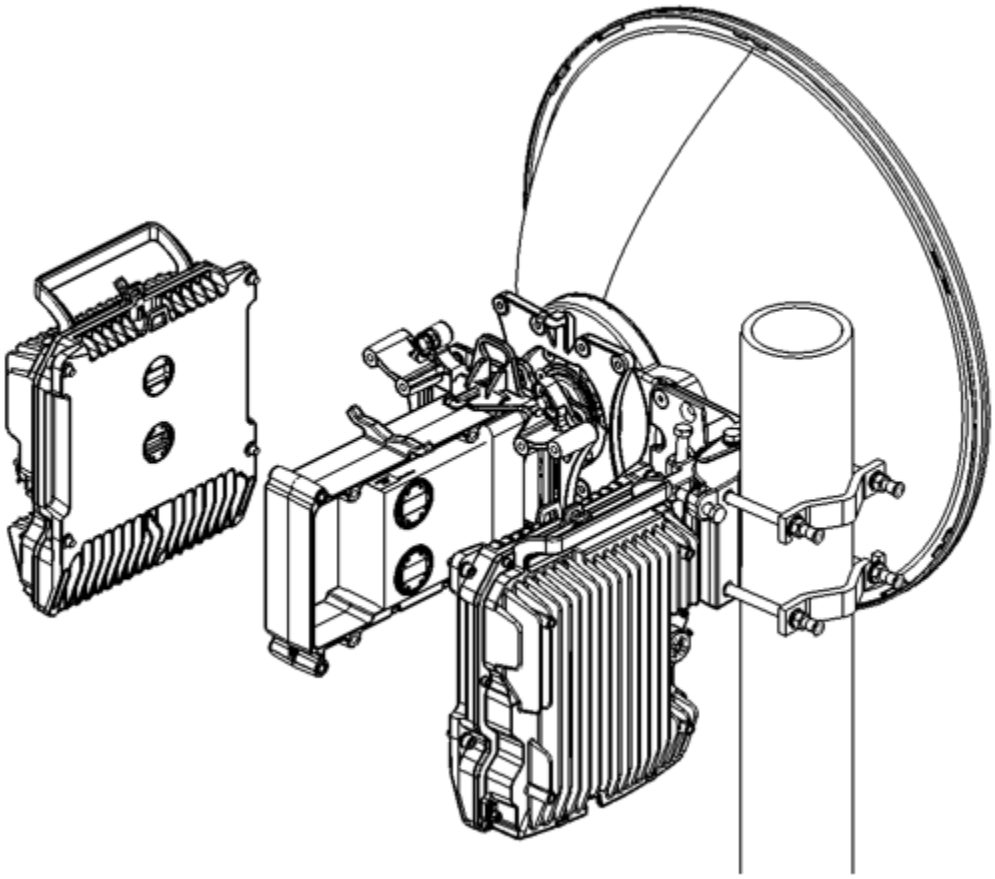

# 4+0 Dual Polarization, Remote Mount

## List of Items

| Item | Description | Quantity | Remarks |
|---|---|---|---|
| 1 | PTP 820C HP Radios | 2 | See Models for Radio Unit |
| 2 | PTP 820C HP Diplexer Units | 2 | See Models for Diplexer Unit |
| 3 | PTP 820C HP OMT Kit | 1 | |
| 4 | Flexible Waveguide Kit | 2 | |
| 5 | PTP 820C HP Dual Circulator/Splitter | 1 | |
| 6 | Adaptor Remote Mount Kit | 1 | |

## Required Tools

- Metric offset hexagon key set
- Metric wrench key set

## Procedure

1. Connect the OMT kit to the antenna and secure it with four screws.

**Important:** Verify that the O-ring is properly mounted between the antenna transition and the OMT.

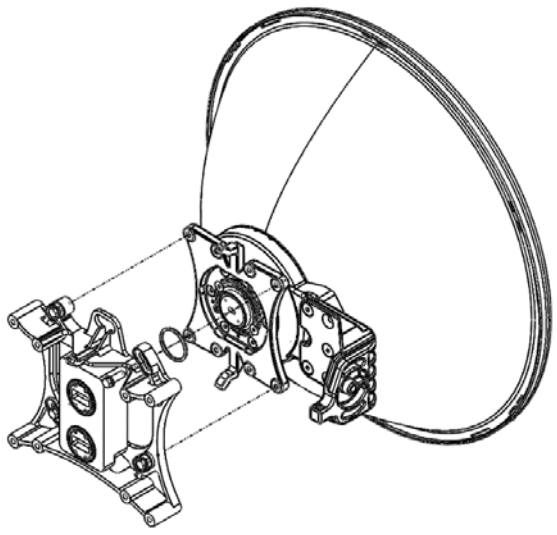

2. Mount and tighten the PTP 820C HP Remote Mount Adaptor plate (supplied in thePTP 820C HP Adaptor Remote Mount kit) to the PTP 820C HP Pole Mount using the four flat screws supplied with the PTP 820C HP Adaptor Remote Mount kit. See Steps 5 and 6 in 2+0 Dual Polarization Remote Mount.
3. Mount and tighten the PTP 820C HP Dual Coupler to thePTP 820C HP Pole Mount using the four screws and washers that are supplied with the PTP 820C HP Dual Circulator/Splitter kit. Make sure that the O-rings are mounted on the PTP 820C HP Remote Mount Adaptor.

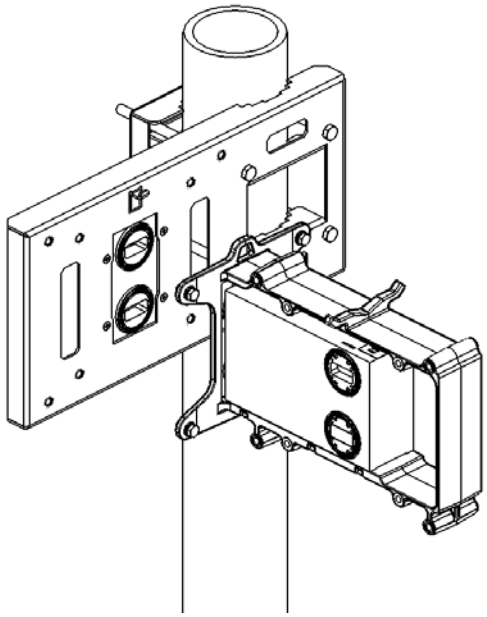

4. Attach the PTP 820 C Diplexer units to the PTP 820 C Dual Circulator/Splitter using 8 M4 screws provided with the Diplexer kit, as shown below, using 20Nm torque.

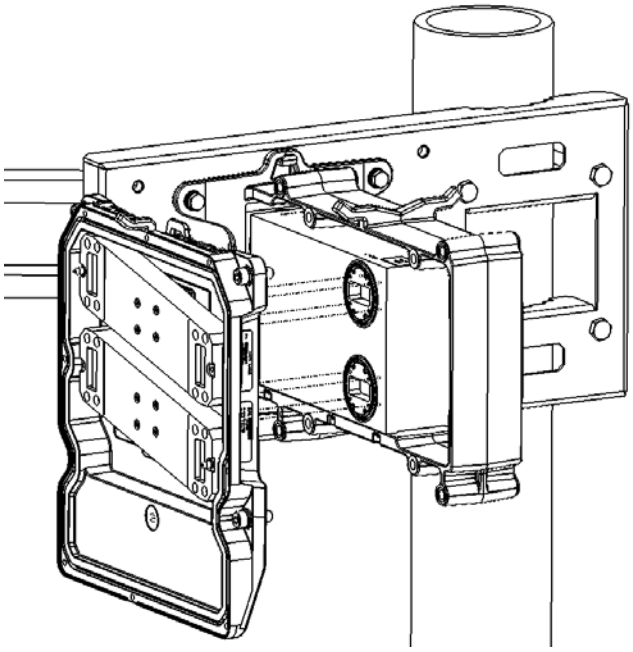

**Note**

Tighten the screws diagonally. First begin to fasten the upper right screw of the top Diplexer and then the lower left screw of the bottom Diplexer, then fasten the upper left screw of the top Diplexer and then the lower right screw of the bottom Diplexer. Once the outer screws have all been partially tightened, repeat this process in a similar fashion with the central screws. Then proceed to fully tighten all the screws in the same order.

**Important:** Verify that the O-rings on the Dual Circulator/Splitter are properly mounted between the Dual Coupler ports and the Diplexer unit.

5. Secure the edges of the Diplexer unit to the Dual Circulator/Splitter using the four M8 captive screws and washers supplied with the Diplexer kit, using 20Nm torque. These screws are colored blue in the following picture. Be sure to tighten the screws in the same diagonal manner as in the previous step.

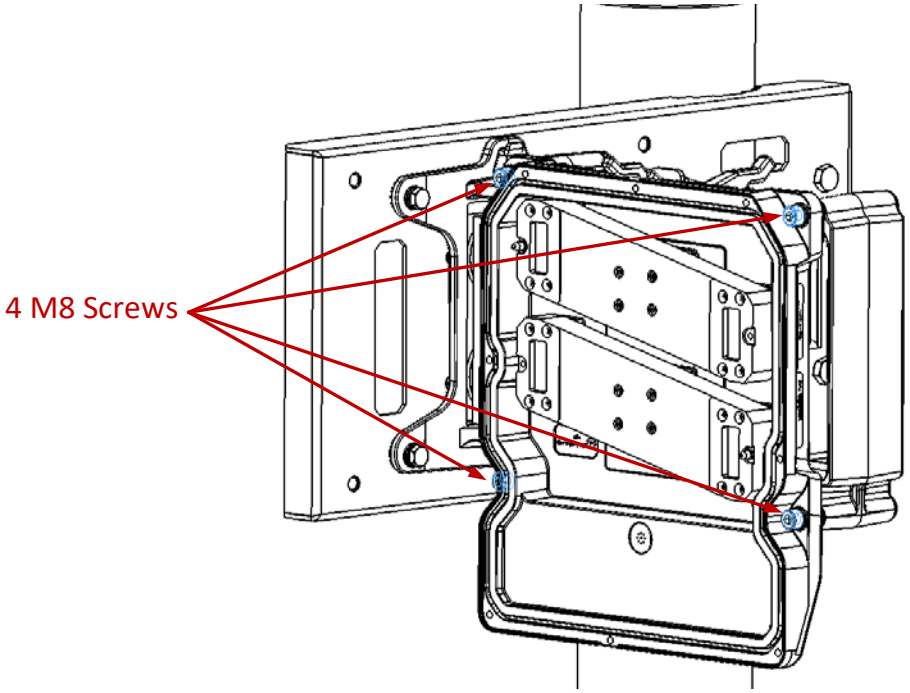


6. Attach the Radio unit to the Diplexer unit using the 8 M5 captive screws supplied with the Radio kit. Position the Radio unit on the Diplexer unit so that the two location pins mounted on the TRX ports of the Diplexer unit fit into the corresponding holes in the Radio unit. Perform the fastening in diagonal fashion as in the previous steps. The location pins are located on either the left of the upper TRX port and the right of the lower TRX port or the right of the upper TRX port and the left of the lower TRX port, depending on the frequency.

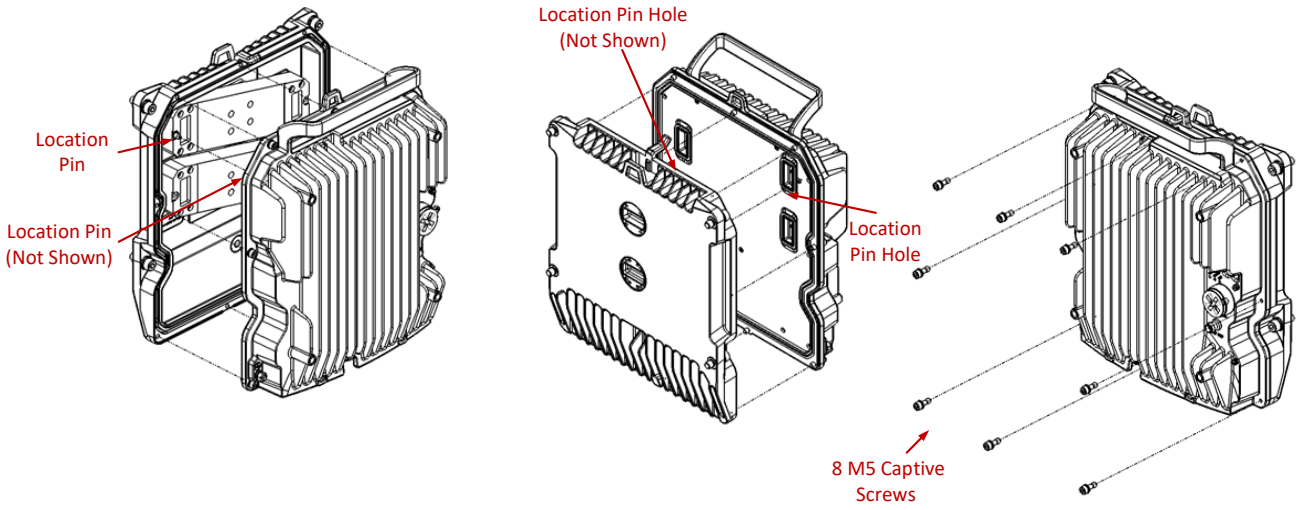


7. Repeat steps 4-6 to attach the second Diplexer unit and the second Radio unit to the other side of the Dual Circulator/Splitter.
8. Connect both Flexible Waveguides and Sealing Gaskets supplied with each Flexible Waveguide Kit to the antenna ports on the Remote Mount Adaptor. Tighten the screws and washers supplied with the Flexible Waveguide Kit.

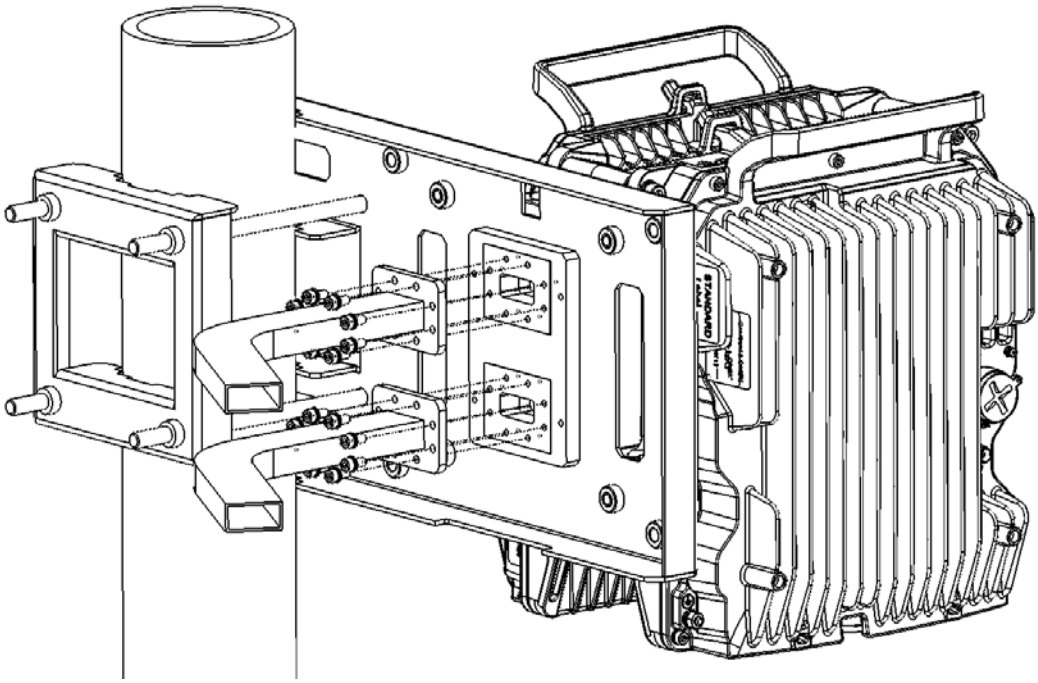

9. Attach the OMT Remote Mount Adapter to the OMT using the screws supplied with the OMT Remote Mount Adapter kit.

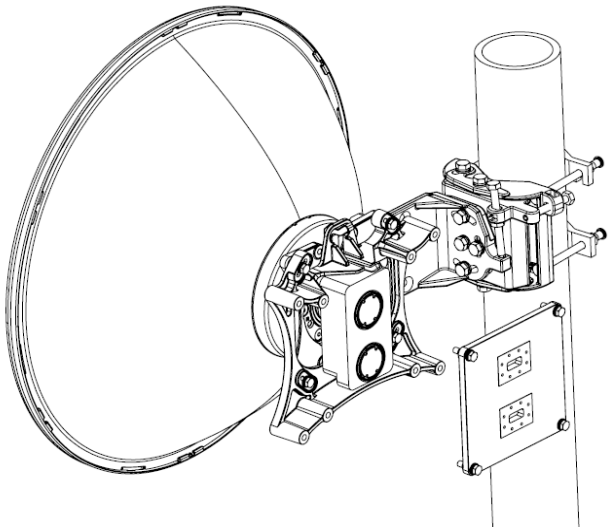

10. Connect both Flexible Waveguides and Sealing Gaskets supplied with each Flexible Waveguide Kit to the OMT Remote Mount Adaptor using the screws supplied with the Flexible Waveguide kits.

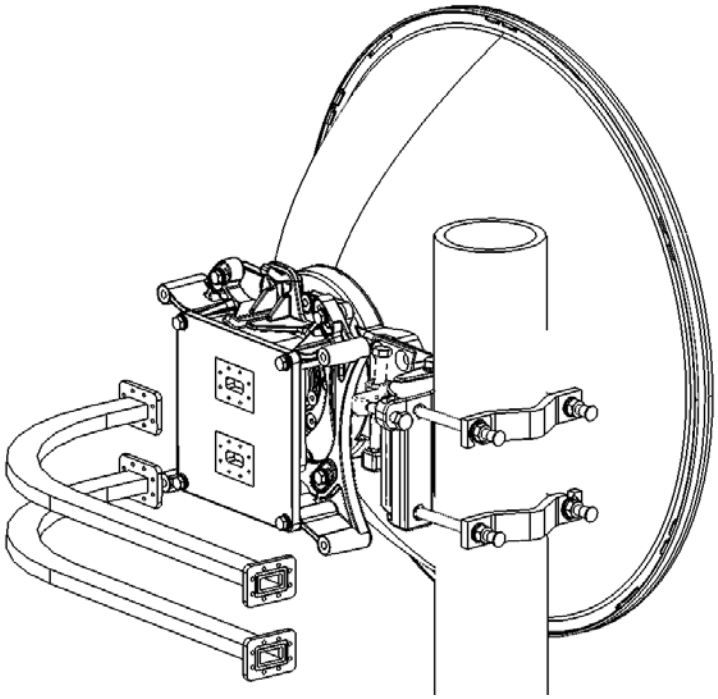

# 4+0 with Dual Circulator Remote Mount

The following example illustrates a typical configuration, assuming that:

- The regulation specifies a channelization of 8 consecutive 28/38MHz channels (1-8 ch).
- The actual channels in use are channels 1,5.

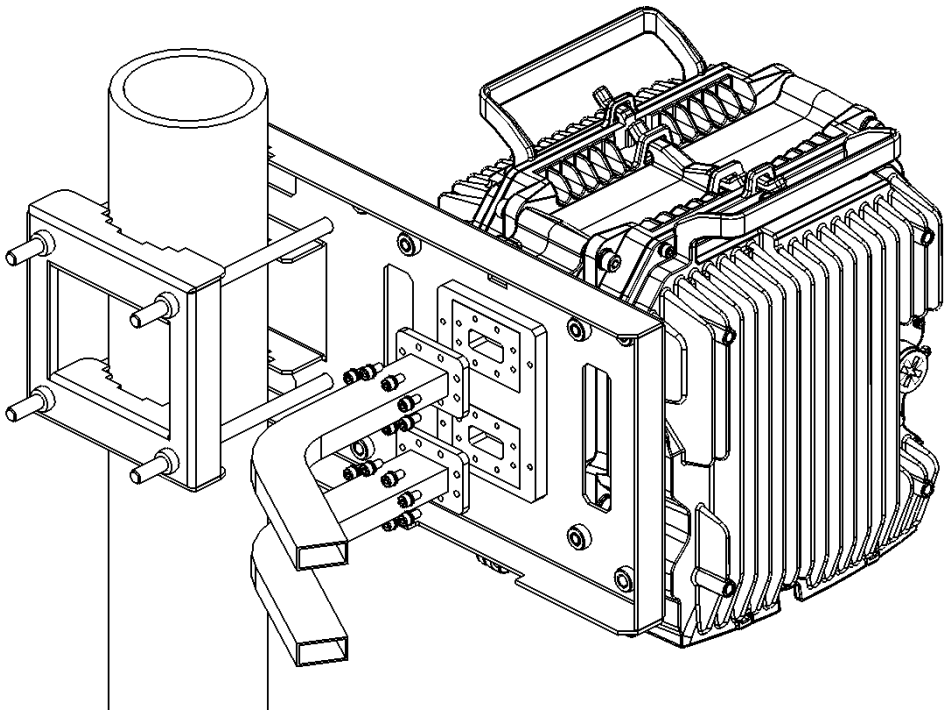

# Dual Circulator Multi-Carrier Kit Installation

## List of Items

| Item | Description | Quantity | Model |
|---|---|---|---|
| 1 | PTP 820C HP RADIO | 4 | See Models for Radio Unit |
| 2 | PTP 820C HP Diplexer Units | 4 | See Models for Diplexer Unit |
| 3 | Dual Circulator | 2 | |
| 4 | PTP 820C HP_MC_DUAL_CIRC_kit_xxG | 1 | |

## Required Tools

- Metric offset hexagon key set
- Metric wrench key set

## Procedure

1 Mount and tighten the pillar adapter brackets to pole (supplied in PTP 820C HP Adaptor Remote Mount kit). Tighten the four M10 Hex screws and washers supplied within the kit.

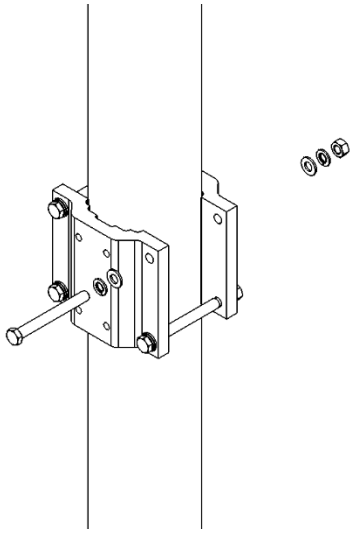

### 6-8 GHz

1 Mount and tighten the PTP 820C HP MC Dual Cir to the PTP 820C HP pillar adapter bracket using the four M8 Hex screws and washers supplied within the kit.

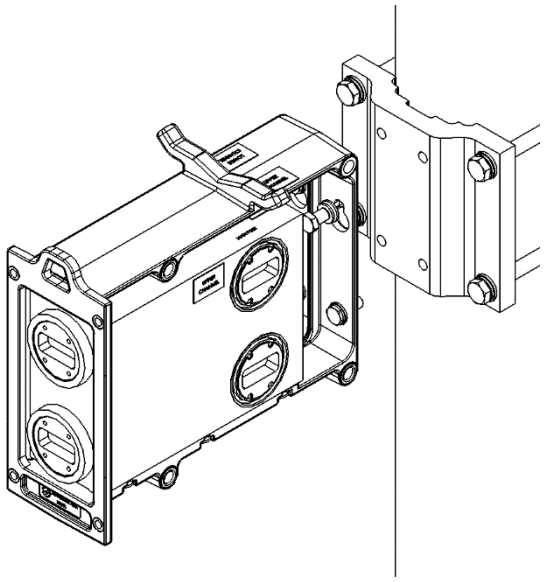

### 11 GHz only

1 Mount and tighten the PTP 820C HP MC extender to the PTP 820C HP pillar adapter bracket using the four M8 Hex screws and washers supplied within the kit.

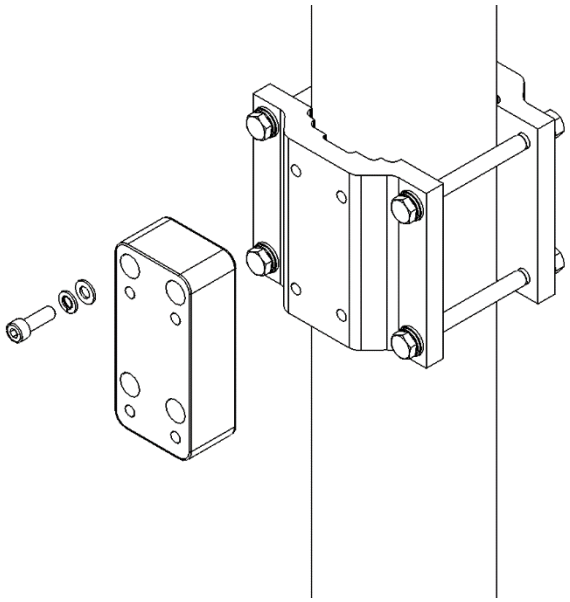

2 Mount and tighten the PTP 820C HP MC Dual Cir to the PTP 820C HP MC Extender using the four M8 Hex screws and washers supplied within the kit.

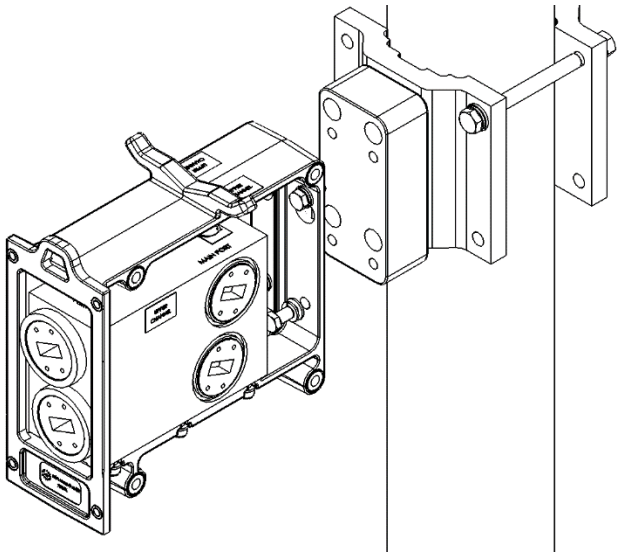

### 6-11GHz

1 Mount and tighten the PTP 820C HP Dual Cir to each side of the PTP 820 MC Dual Circ using the four M8 Hex screws and washers supplied in the PTP 820 Dual Circ kit. Pay attention that the O-rings on the PTP 820C HP MC Dual Circ are well in place during the mounting.

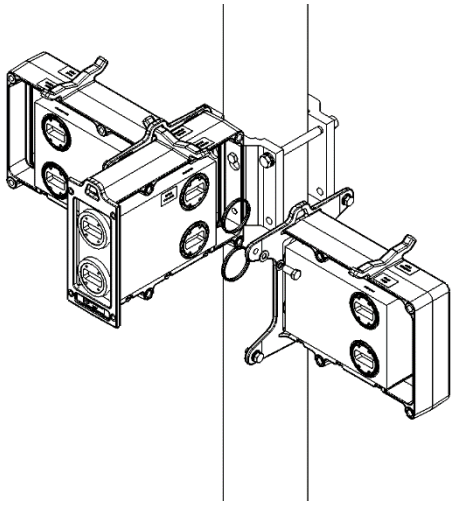

2 Mount and tighten the PTP 820C HP radios to each PTP 820C HP Dual Circ radio port using the four screws assembled on the PTP 820C HP radio. Pay attention that the O-rings on the PTP 820C HP Dual Circ are well in place during the mounting.

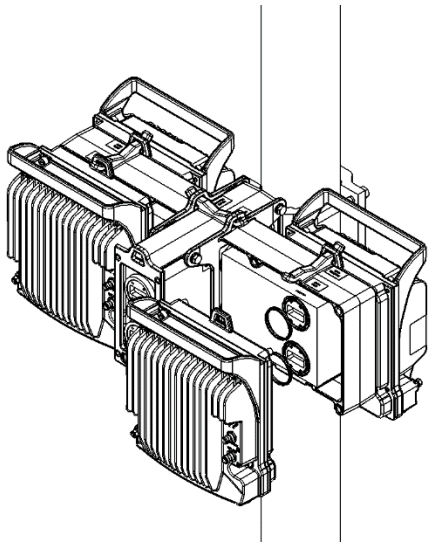

3 Mount and tighten the PTP 820C HP MC Remote mount adapter to the PTP 820C HP MC Dual Circ antenna ports using the four screws assembled on the PTP 820C HP radio. Pay attention that the O-rings on the PTP 820C HP MC Remote mount adapter are well in place during the mounting.

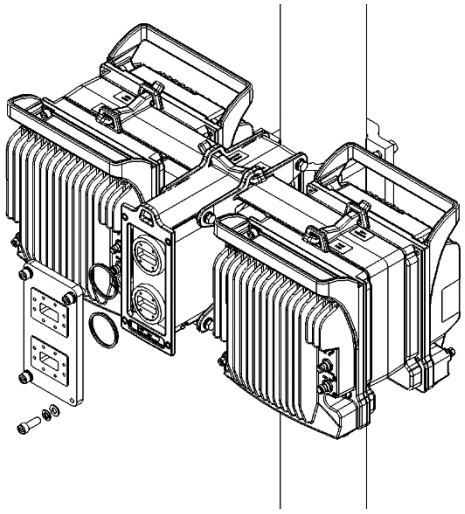

4 Mount and tighten the O-ring and the Flexible WG to the PTP 820C HP MC Remote mount adapter ports using the four screws supplied with the Flexible WG kit.

5 Mount and tighten the O-ring and flexible WG to both antenna ports using the four screws supplied with the flexible WG kit.

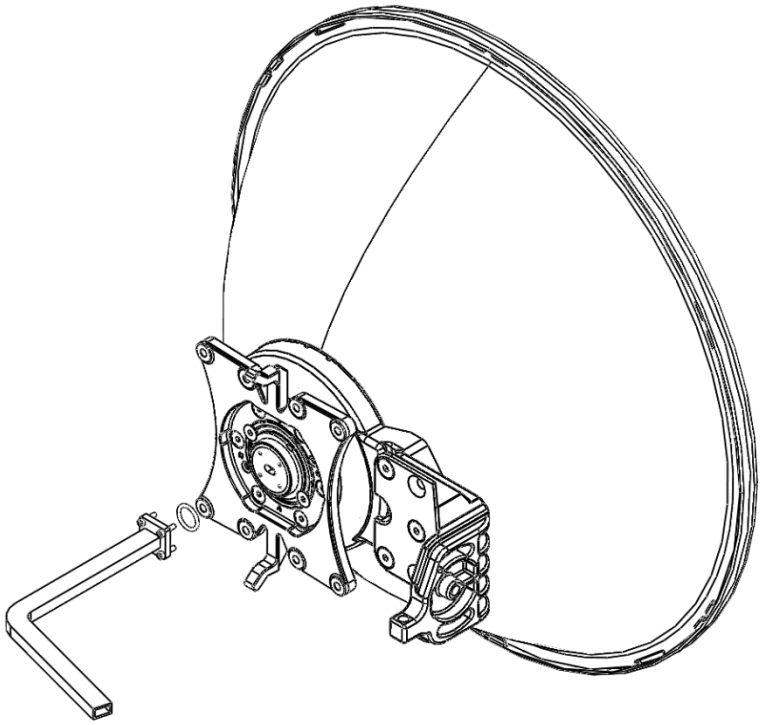

The following example illustrates a typical configuration, assuming:

- The regulation specifies a channelization of 8 consecutive 28/30 MHz channels (1-8ch).
- The actual channels in use are channels 1, 5.

Figure 40 4+0 Configuration

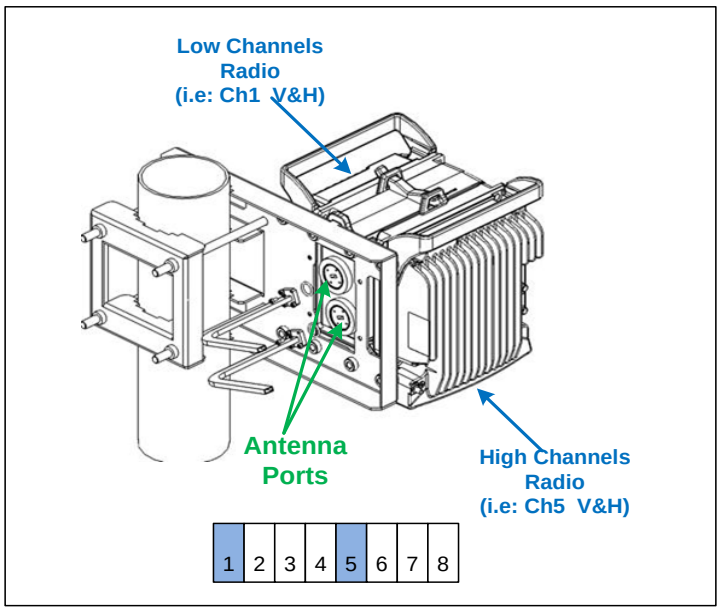


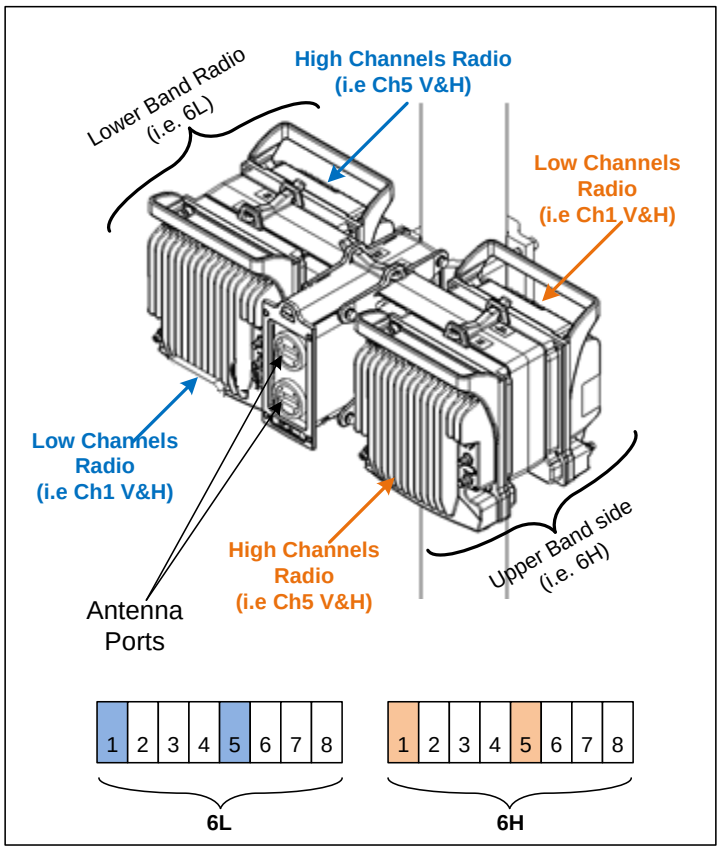

# AFR 1+0 Hub Site

In an AFR 1+0 configuration, a Multicore PTP 820C HP unit is deployed at the hub site and two PTP 820C HP or PTP 820C HP units are deployed in two tail sites.

The hub site utilizes a single PTP 820C HP unit with two radio carriers. Each carrier is in a link, via its own directional antenna, with a tail site that consists of a PTP 820C HP or PTP 820S unit.

**Note**

The links should be located so as to ensure that the two radio paths do not cross.

The tail site unit is installed as a simple 1+0 configuration.

The hub site unit is installed as a remote mount configuration in which two flexible waveguides are used to connect the two Remote Mount Adaptor ports to an antenna. This chapter describes a hub site installation.

For standard interface antennas (six feet and larger), no OMT and no Circ./Circ. Adaptor are used, and the flexible waveguides are connected directly to the antenna flanges. For instructions how to connect the waveguides to the antenna flanges, refer to the antenna vendor's documentation.

## List of Items

| Item | Description | Quantity | Model |
|---|---|---|---|
| 1 | PTP 820C HP Radios | 1 | See Models for Radio Unit |
| 2 | PTP 820C HP Diplexer Units | 1 | See Models for Diplexer Unit |
| 3 | Flexible Waveguide Kit | 2 | |
| 4 | PTP 820C HP DC POLE MOUNT KIT | 1 | |
| 5 | Adaptor Remote Mount Kit | 1 | |
| 6 | Circ./Circ. Adaptor | 1 | Per Antenna Vendor. Not used for standard interface antennas (six feet and larger). |

## Required Tools

- Metric offset hexagon key set

- Metric wrench key set
- Phillips #1, #2 screwdriver

## Procedure

1 Prior to the installation, follow the antenna manufacturer's instructions to use the circular adaptor. (Remove the existing rectangular transition, swap the O-ring, and install the circular transition instead.)

2 Mount and tighten the Flexible WG to the antenna port using the four screws supplied with the Flexible WG kit.

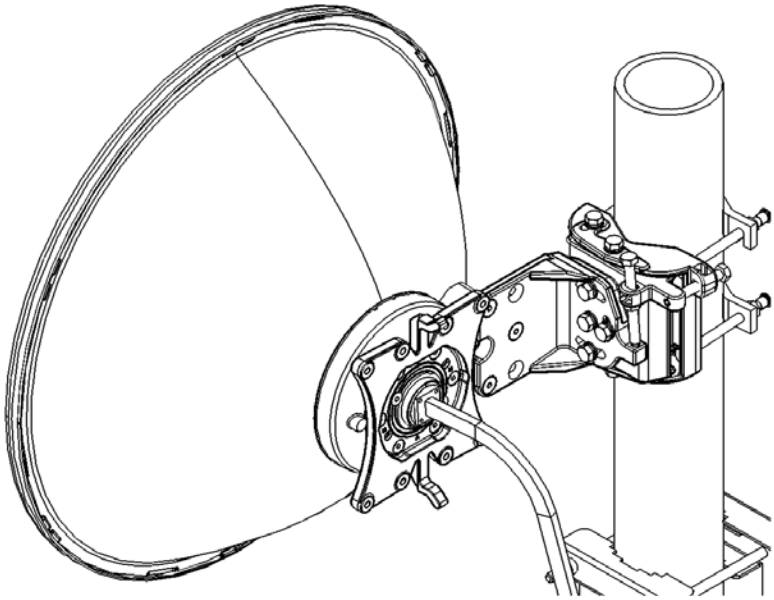

3 Mount and tighten the PTP 820C HP Remote Mount Adaptor plate (supplied in PTP 820C HP Adaptor Remote Mount kit) to the PTP 820C HP Pole Mount using the four flat screws supplied with the PTP 820C HP Adaptor Remote Mount kit.

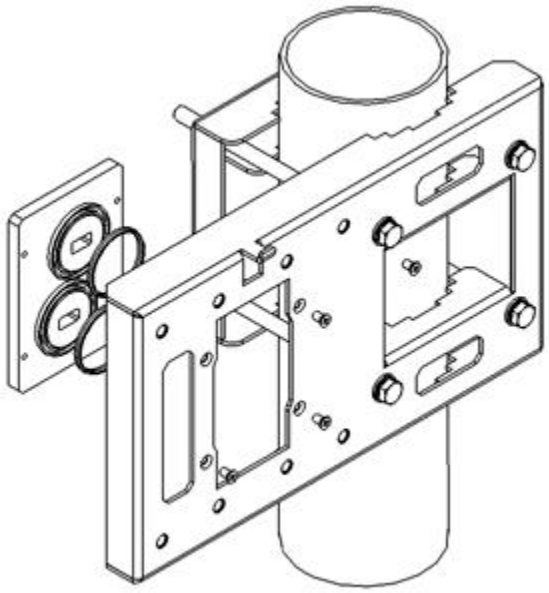

4 Mount and tighten the PTP 820C HP to the PTP 820C HP Pole Mount using the four captive screws and washers that are supplied with the PTP 820C HP. Pay attention that the O-rings are mounted on the PTP 820C HP Remote Mount Adaptor.

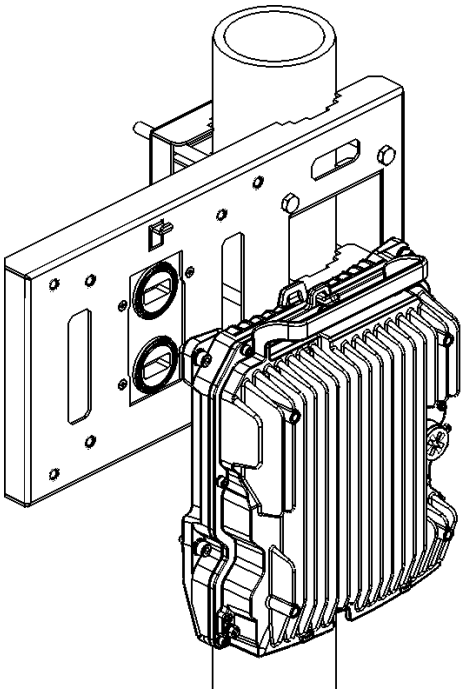

5 Mount and tighten both Flexible WGs with their O-ring to the PTP 820C HP Remote Mount Adaptor ports using the four screws supplied with each Flexible WG kit.

The following figure shows the complete installation.

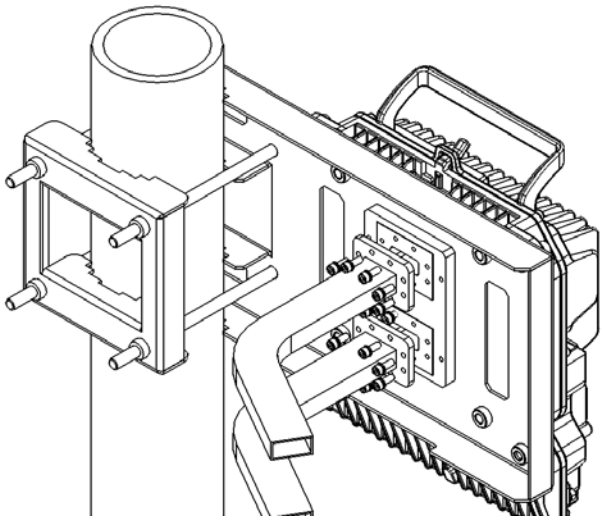

**Note**

This figure shows an installation with horizontal polarization. Vertical polarization can also be used. The same polarization must be used for both links.

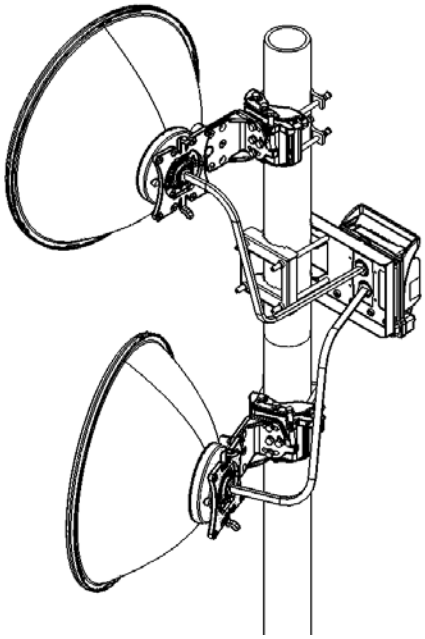

# Chapter 8: Installation Instructions for Configurations with Channel Filter-Based Branching

Channel filter-based branching configurations utilize the following components:

- OCU
- OCU Mounting Kit
- Short U-Bend
- Long-U-Bend
- Termination
- Splitter/Coupler

This chapter is set up as follows:

- Channel Filter-Based Branching – Component Assembly – Explains how to assemble each individual component used in channel filter-based branching configurations.
- Channel Filter-Based Branching – Configurations – Explains how to assemble channel filter-based branching configurations, with references to the relevant component assembly instructions.

## Channel Filter-Based Branching – Component Assembly

### Assembling the OCU Mounting Kit

This section explains how to attach the OCU mounting kit for PTP 820C HP radio units to a 114 mm pole.

**List of Items**

| Item | Description | Quantity | Model |
|---|---|---|---|
| 1 | PTP 820C HP Branching Pole Profile | 1 | Part of OCU Mounting kit, FXDH-RM-MOUNT-kit |
| 2 | PTP 820C HP Branching Pillar | 2 | Part of OCU Mounting kit, FXDH-RM-MOUNT-kit |

Figure 41 Branching Pole Profile

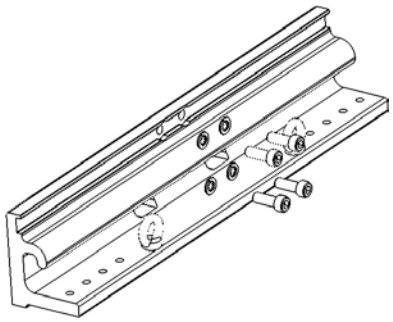

Figure 42 Branching Pillars (with Screws, Nuts, and Washers)

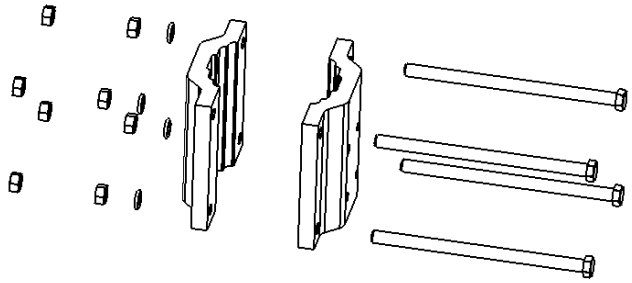

### Required Tools

- Metric offset wrench key wrench set

### Procedure

1. Mount and tighten the two Branching Pillars to a pole with a diameter of 114 mm using the four M10x150 screws, four washers, and eight nuts supplied with the OCU Mounting kit. Use torque of 45 Nm.

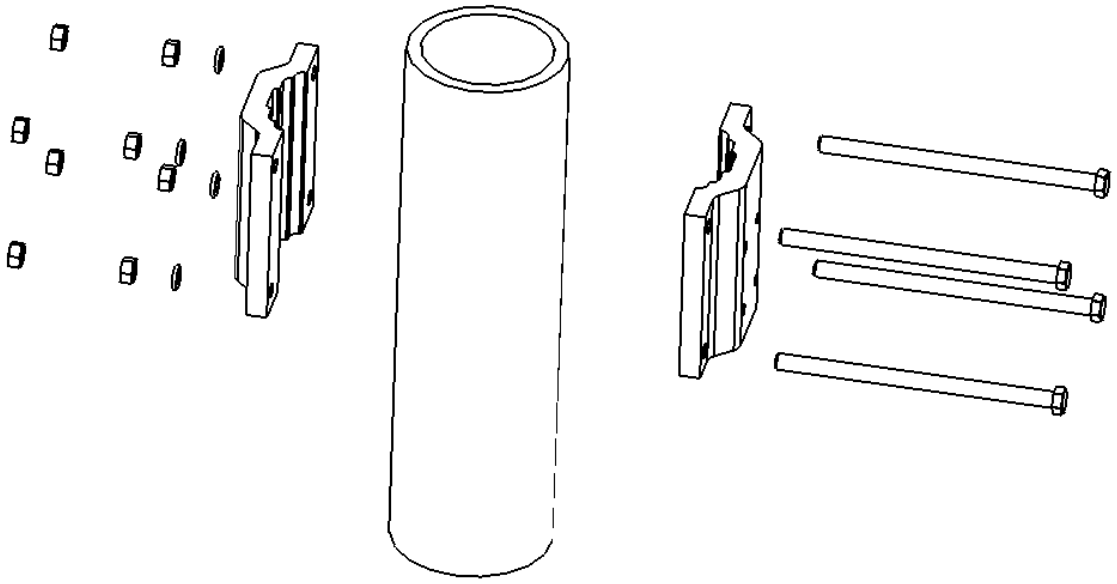

2. Mount and tighten the Branching Pole to one of the Branching Pillars using the four M10x25 screws supplied with the OCU Mounting kit. Use torque of 45 Nm.

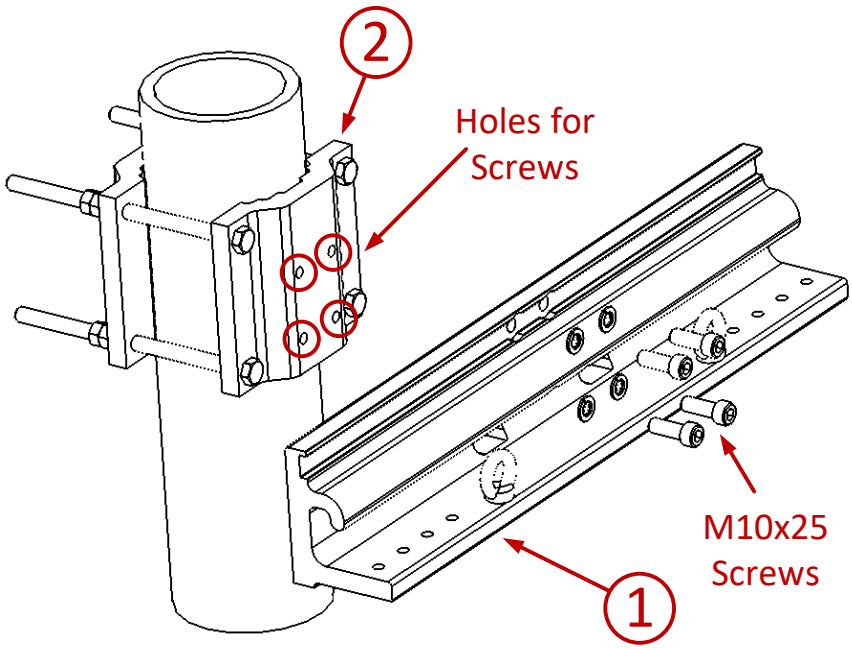

## Assembling the OCU

List of Items

| Item | Description | Quantity | Model |
|---|---|---|---|
| 1 | PTP 820C HP OCU Kit | 1 per radio | See Models for OCU Unit |
| 2 | OCU Body | 1 per OCU kit | Included in OCU kit |
| 3 | OCU Rail | 1 per OCU kit | Included in OCU kit |
| 4 | PTP 820C HP Radio | 2-4 | See Models for Radio Unit |
| 5 | Screw Socket hex head SS DIN 912-M8x25-A2-70 | 4 per OCU kit | Included in OCU kit |
| 6 | Screw Socket hex head SS DIN 912-M8x30-A2-70 | 2 per OCU kit | Included in OCU kit |
| 7 | Washer, Plain, SS, DIN 125-A8.4-A2-70 | 6 per OCU kit | Included in OCU kit |
| 8 | Washer, Helical spring lock SS DIN 127-B8-A2-70 | 6 per OCU kit | Included in OCU kit |
| 9 | Branching Pole Profile | 1 | Part of OCU Mounting kit, FXDH-RM-MOUNT-kit |

Figure 43 1, 2, 4 – OCU Kit (Body, Rail, and M8x25 Screws

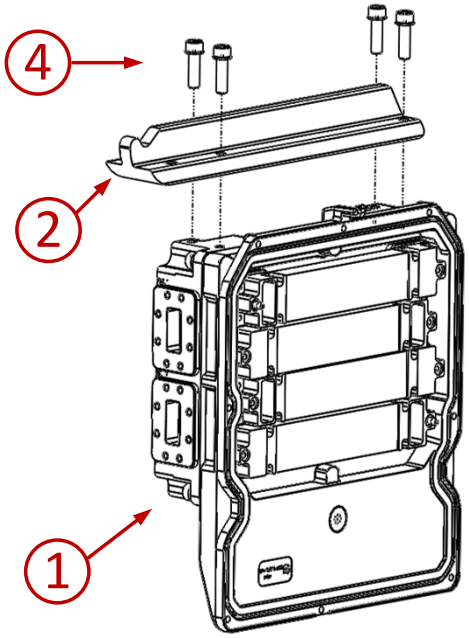


3 – PTP 820C HP Radio

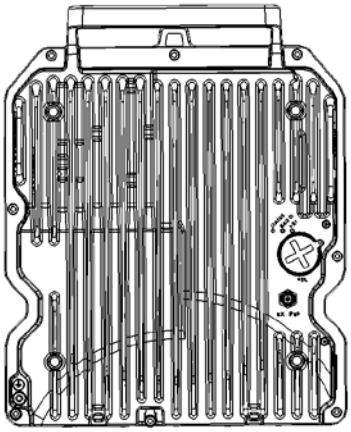

4– M8x25 Screw

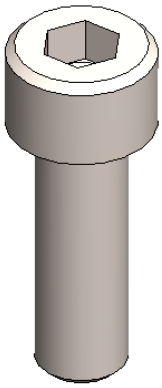

5 - M8x30 Screw

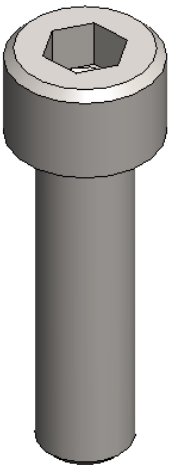

6– Washers, Plain

7 - Washers, Helical spring lock

8 – Branching Pole Profile

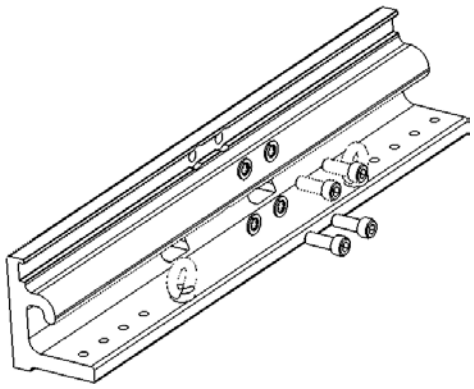

### Required Tools

- Metric offset wrench key wrench set
- Metric Allen key set

### Required Torque

- M5 screws (with radio) – 2.5 Nm
- M8 screws (with OCU) – 20 Nm

### Configuration Options for OCU Kit Assembly

Attach the OCU rail to the OCU body, using the 4 M8 X 25 screws, helical washers, and flat washers, provided with the OCU kit.

The rail can be oriented in either of the two ways shown in Figure 1 and Figure 2:

- With the nose of the rail protruding to the left when facing the inside of the OCU (Figure 46).
- With the nose of the rail protruding to the right when facing the inside of the OCU (Figure 47).

Figure 46 Left Rail Configuration

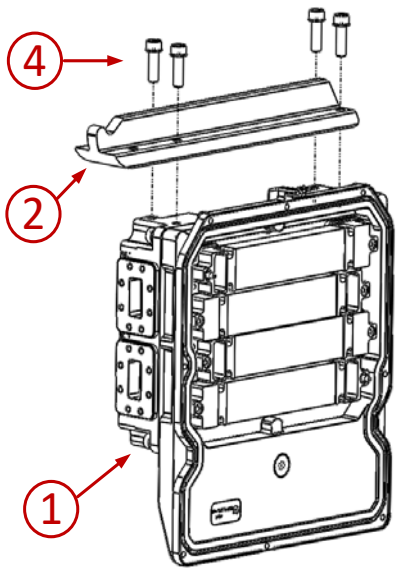


Figure 47 Right Rail Configuration

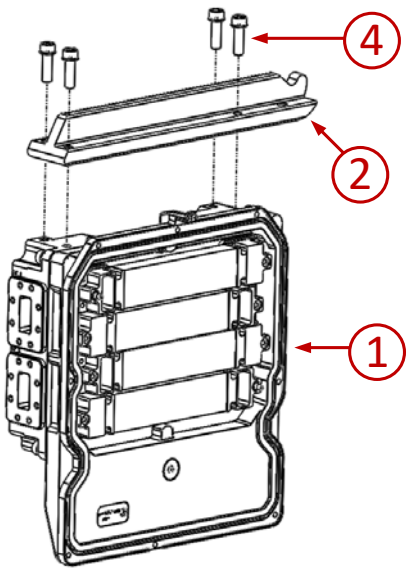


Figure 48 shows the Left Rail and Right Rail configurations in the context of a full configuration in which four radios and four OCUs are attached to the Branching Pole Profile.

**Important!** The figure below is illustrative only. Do not mount the OCU to the Branching Pole Profile until the radio unit has been attached to the OCU, as described below.

Figure 48 Left and Right Rail Configurations Together

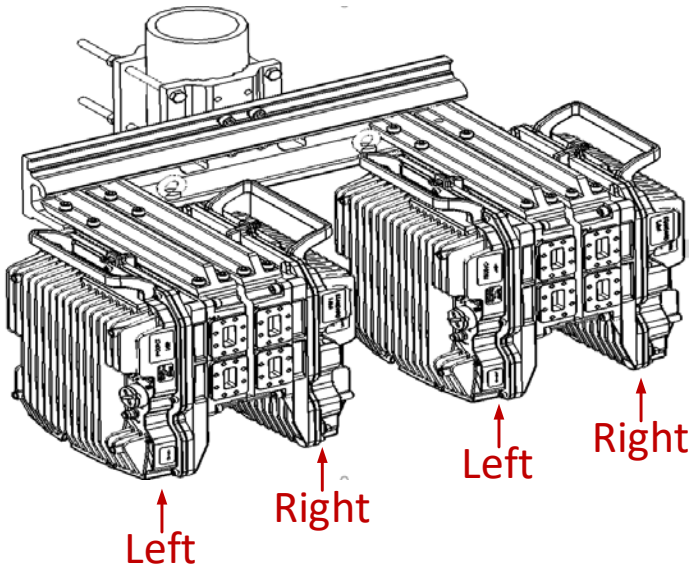

## Connecting the OCU to the PTP 820C HP Radio

Attach the M5 captive screws on the radio to the OCU kit, as shown in Figure 49. Partially fasten the screws, without tightening them, in a diagonal fashion as shown in Figure 50. Once all the screws have been partially fastened, tighten all the screws in the same order, using 2.5 Nm torque.

Figure 49 Attaching the Radio to the OCU

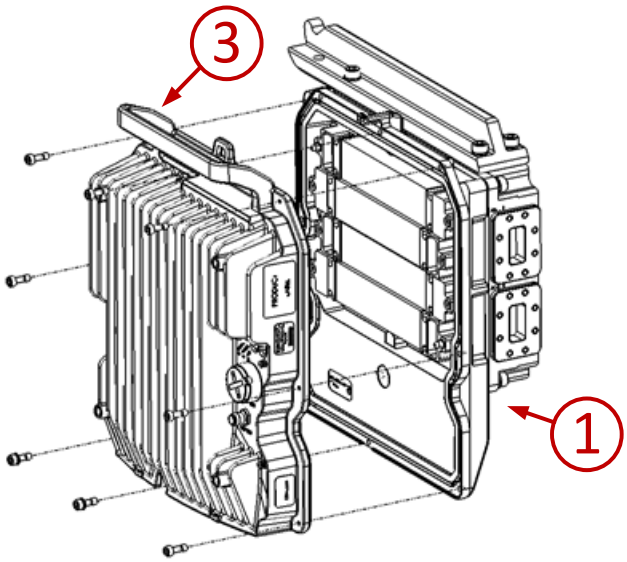


Figure 50 Order of Fastening Screws

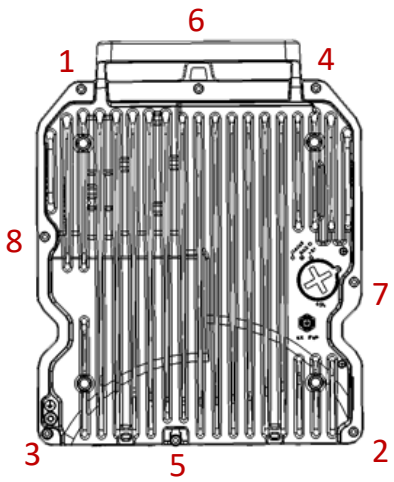


### Connecting the Combined OCU and Radio to the Branching Pole Profile

Once the OCU and radio unit have been connected, mount the complete OCU-radio unit to the Branching Pole Profile, as shown in Figure 6 and Figure 7.

1 Angle the nose of the OCU Rail so as to hook underneath the nose of the Branching Pole Profile (Figure 51).

Figure 51 Angling the OCU Rail Underneath the Nose of the Branching Pole Profile

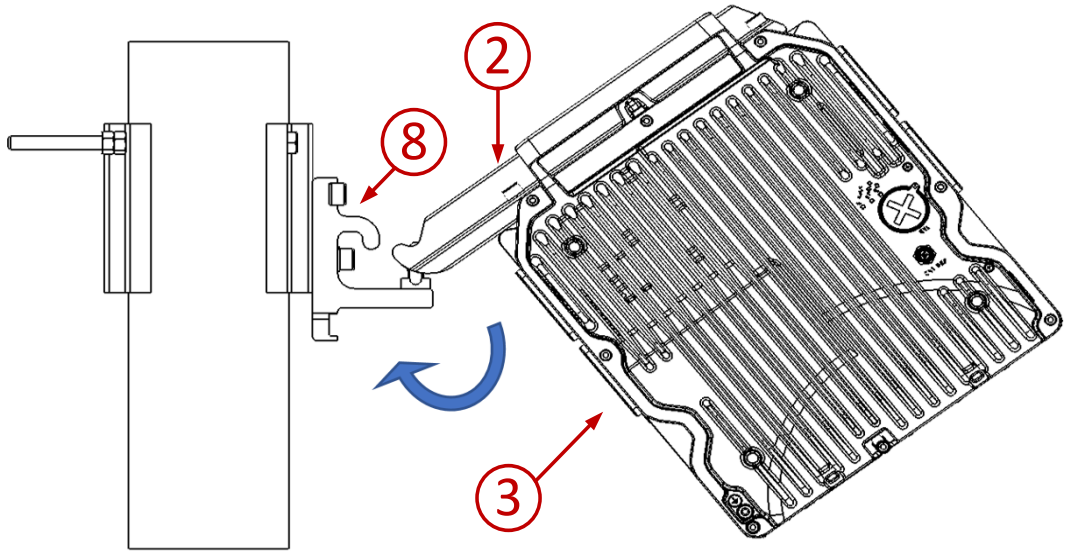


2 Level the OCU-radio unit so that the nose of the OCU Rail is locked underneath and inside of the nose of the Branching Pole Profile( Figure 52).

Figure 52 Final Position of OCU-Radio Locked into Branching Pole Profile

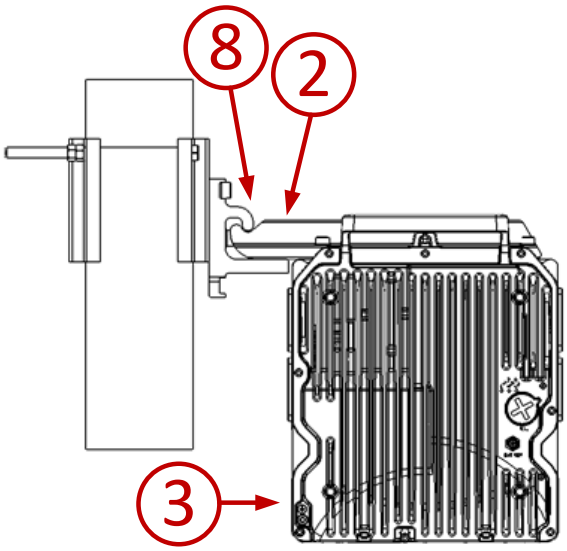


3 Partially attach the OCU-radio unit to the Branching Pole Profile with the two M8-30 screws included in the OCU kit, along with the remaining helical and flat washers, as shown in Figure 53. It is very

important that at this point in the procedure, you do not fully tighten the screws. The screws should only be fully tightened after all the U-Bends and (if necessary) Terminations have been attached!

Figure 53 Securing the OCU-Radio Unit to the Branching Pole Profile

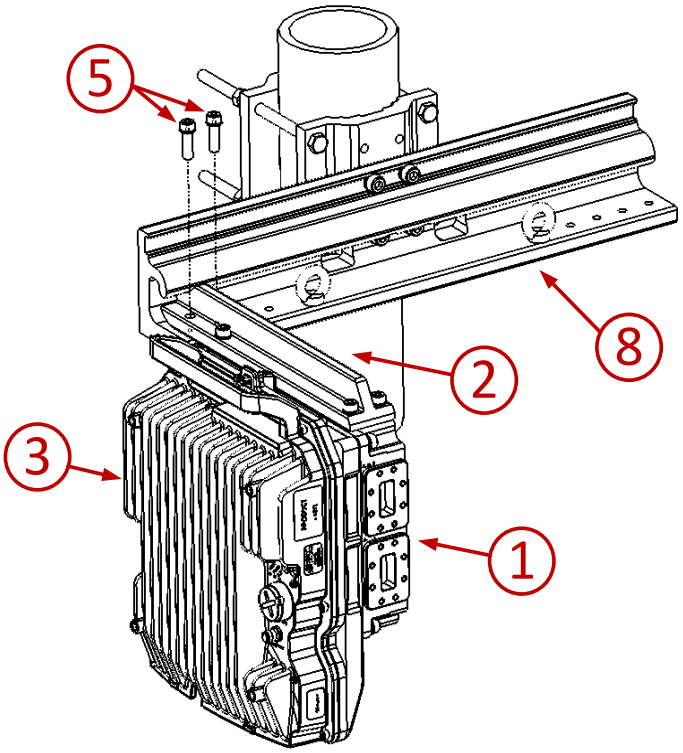


### Waveguide Assemblies

At this point in the installation, you must install all required waveguide assemblies, such as U-Bends, Flexible Waveguides, and Terminations. For instructions, refer to the specific type of configuration you are installing in Channel Filter-Based Branching – Configurations.

### Tightening the M8-30 Screws

When you have finished installing all waveguides, and all of the radio ports have been covered, you must fully tighten the two M8-30 screws that attach the OCU-radio unit to the Branching Pole Profile as shown above in Figure 53.

## Cable and Shackle Assembly

Once all the screws have been fully fastened, the complete assembly is ready to be raised via a crane. Make sure to loop the cable through both shackles on the OCU Rail, as shown in Figure 54. You must also loop the cable through all the PTP 820C HP radio handles in the configuration.

Figure 54 Raising the Assembly Via Crane

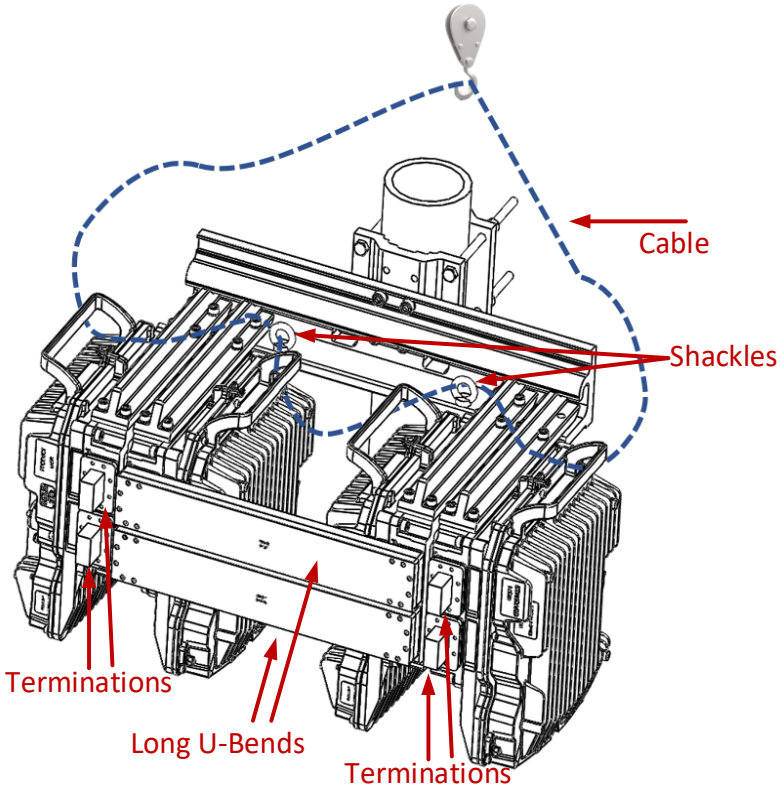

# Assembling a Short U-Bend

This guide explains how to attach a Short U-Bend between the radio ports of two OCUs. Short U-Bends are used to connect the radio ports of adjacent OCUs on the side closest to the pole mount.

## List of Items

| Item | Description | Quantity | Model |
|---|---|---|---|
| 1 | PTP 820C HP Branching Short U-Bend Kit | Depends on Configuration | |
| 2 | #8-32 Socket Hex Screws | 12 Per U-Bend | Embedded in U-Bend |

Figure 55 1 – Short U-Bend

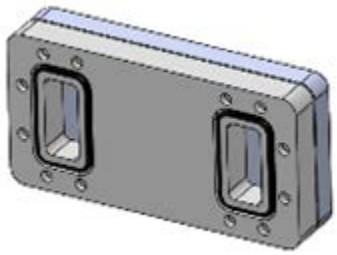

### Required Tools

- Imperial Allen key set

### Required Torque

- #8-32 socket hex screws (embedded in U-Bend) – 2.5 Nm

### Procedure

1 Before attaching the U-Bend, make sure that the U-Bend is already fitted with bushings in both ports. The U-Bend should be supplied with bushings to seal the RF.

2 Short U-Bends are connected between adjacent radio ports on the side closest to the Pole Mount. Place the U-Bend so that the embedded #8-32 socket hex screws are in line with the radio ports of

the OCUs, as shown in the figure below. Make sure the sealing gaskets supplied with the U-Bend are in place before mounting the U-Bends.

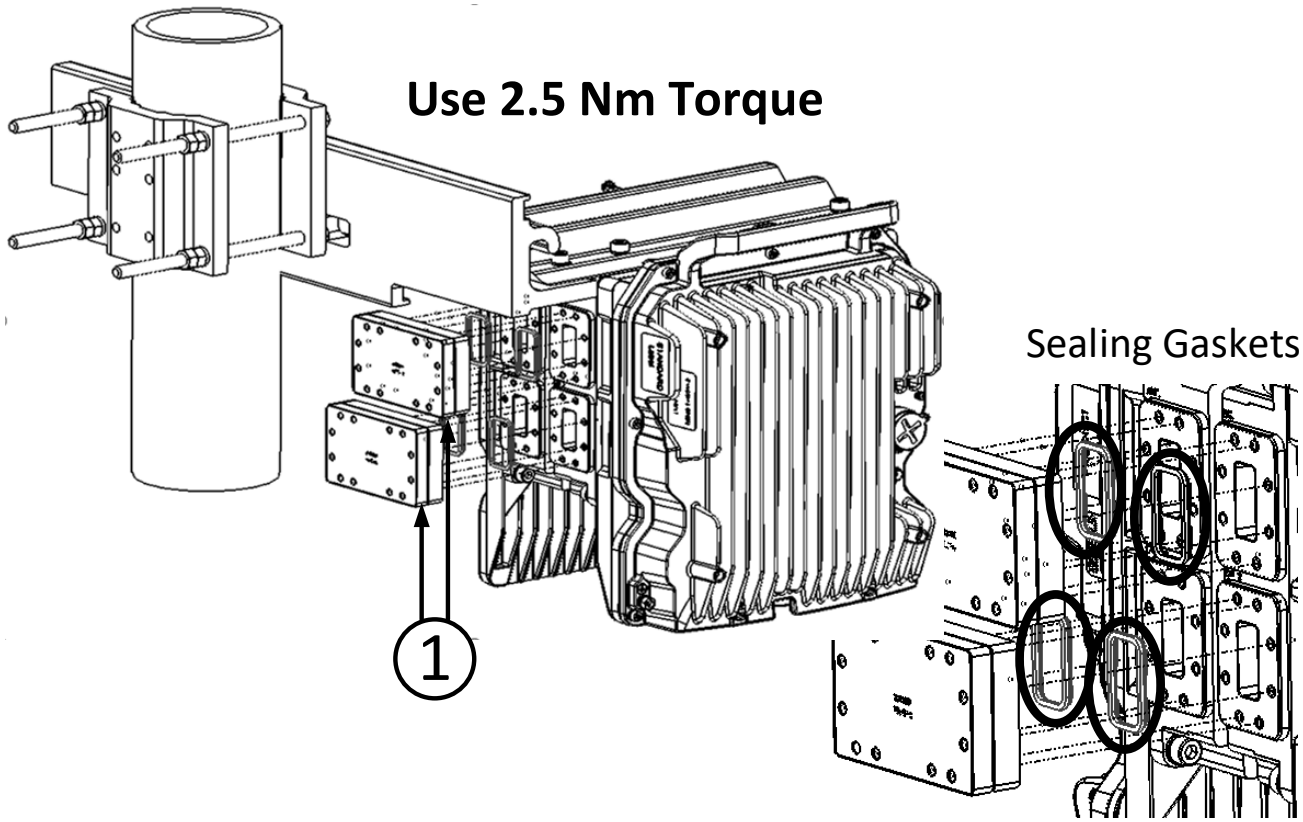

## Assembling a Long U-Bend

Long U-Bends are used to connect the radio ports of adjacent OCUs on the far side from the pole mount.

### List of Items

| Item | Description | Quantity | Model |
|---|---|---|---|
| 1 | PTP 820C HP Branching Long U-Bend Kit | Depends on Configuration | |
| 2 | #8-32 Socket Hex Screws | 12 Per U-Bend | Embedded in U-Bend |

Figure 56 1 – Long U-Bend

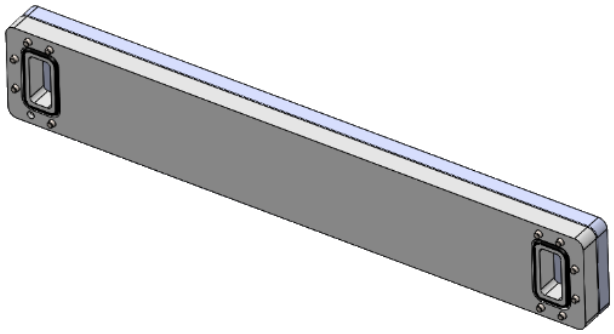

### Required Tools

- Imperial Allen key set

### Required Torque

- #8-32 socket hex screws (embedded in U-Bend) – 2.5 Nm

### Procedure

1 Before attaching the U-Bend, make sure that the U-Bend is already fitted with bushings in both ports. The U-Bend should be supplied with bushings to seal the RF.

2 Long U-Bends are connected between adjacent radio ports on opposite sides of the Branching Pole Profile. Place the U-Bend so that the embedded #8-32 socket hex screws are in line with the radio

ports of the OCUs, as shown in the figure below. Make sure the sealing gaskets supplied with the U-Bend are in place before mounting the U-Bends.

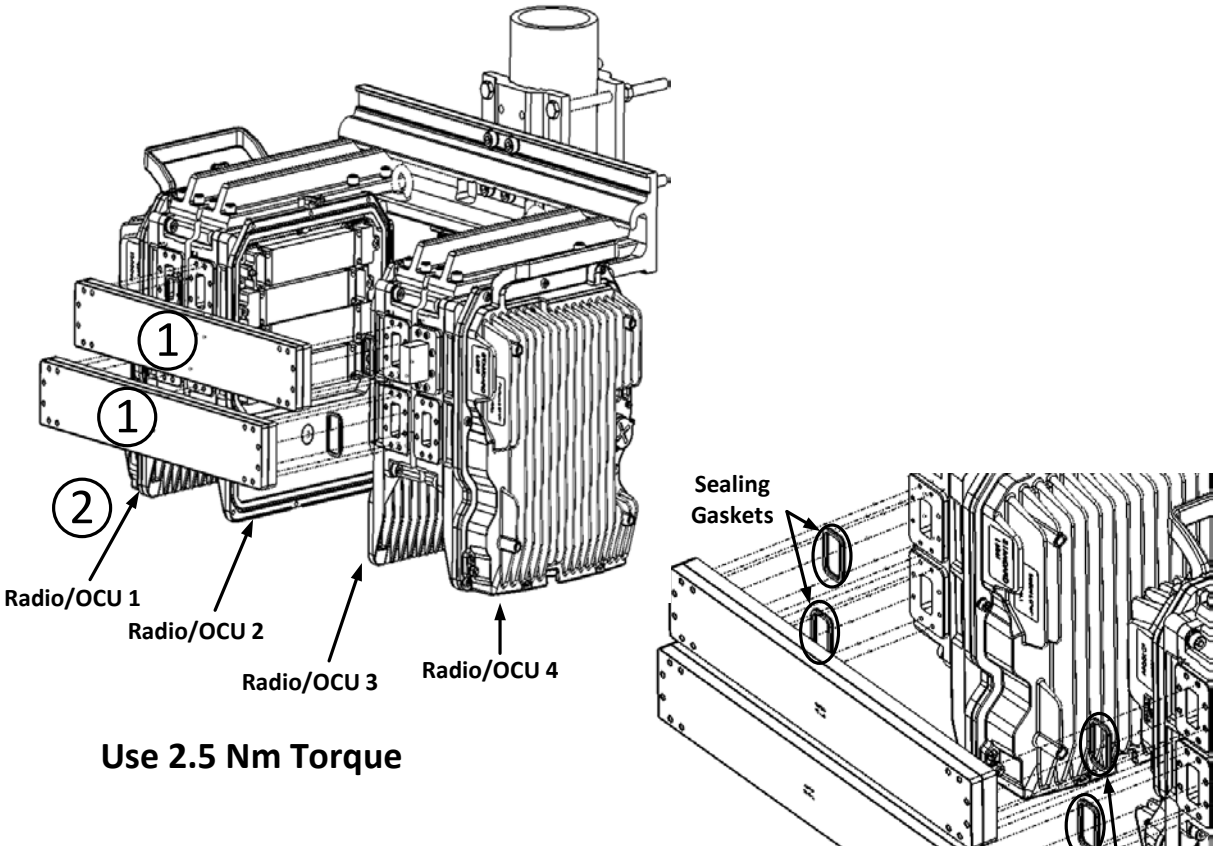

## Assembling a Termination

All ports not otherwise covered or in use should be covered by a Termination.

### List of Items

| Item | Description | Quantity | Model |
|---|---|---|---|
| 1 | PTP 820C HP Termination Kit | Depends on Configuration | |
| 2 | #8-32 Socket Hex Screws | 8 Per Termination Kit | Included in Termination Kit |
| 3 | Washer, Helical Spring Lock SS DIN 127-B8-A2-70 | 8 Per Termination Kit | Included in Termination Kit |
| 4 | Washer, Plain, SS, DIN 125-A8.4-A2-70 | 8 Per Termination Kit | Included in Termination Kit |
| 5 | Sealing Gasket | 1 Per Termination Kit | Included in Termination Kit |

### Required Tools

- Imperial Allen key set

### Required Torque

- #8-32 socket hex screws – 2.5 Nm

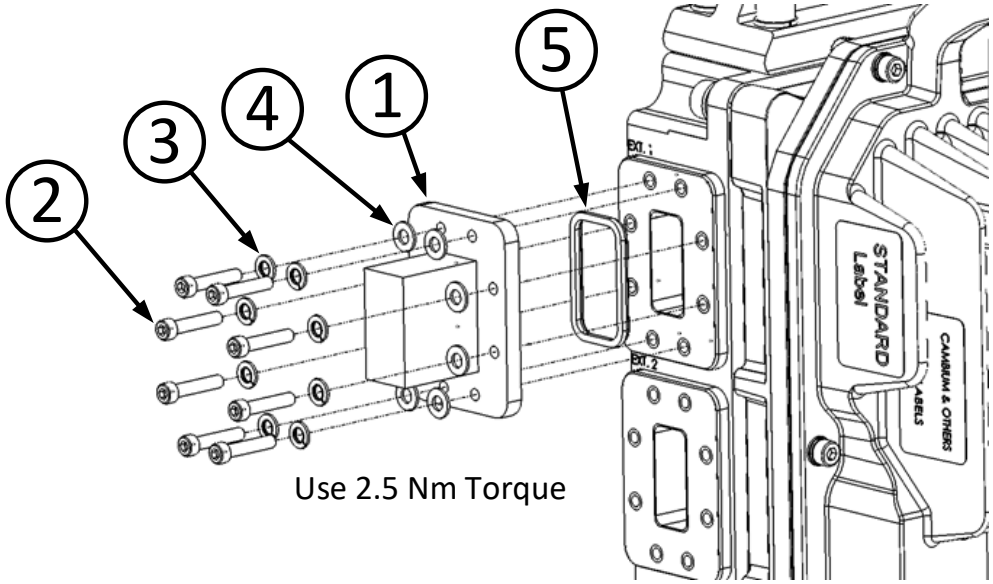

# Assembling a Splitter or Coupler for Filter-Based Branching

### List of Items

| Item | Description | Quantity | Model |
|---|---|---|---|
| 1 | PTP 820C HP Splitter Kit | Depends on Configuration | |
| 2 | PTP 820C HP Coupler Kit | Depends on Configuration | |
| 3 | 6 GHz: #10-32 Screws<br>7-11 GHz #8-32 Screws | 8 Per Kit | Included in Splitter/Coupler Kit |
| 4 | 6 GHz: Washer, Helical spring lock, SS, ANSI, #10<br>7-11GHz: Washer, Helical spring lock, SS, ANSI,#8 | 8 Per Kit | Included in Splitter/Coupler Kit |
| 5 | 6GHz: Washer, Plain, SS, DIN 125-A5.3-A2-70<br>7-11GHz: Washer, Plain, SS DIN 125-A4.3-A2-70 | 8 Per Kit | Included in Splitter/Coupler Kit |
| 6 | Sealing Gasket | 1 Per Kit | Included in Splitter/Coupler Kit |

### Required Tools

- Imperial Allen key set

### Required Torque

- #8-32 socket hex screws – 2 Nm
- #10-32 socket hex screws – 3.2 Nm

## Procedure

A Remote Mount Splitter or Remote Mount Coupler is attached to the OCU using the 8 screws, helical spring washers, and plain washers provided with the Coupler or Splitter kit, as shown in the figure below. The other interfaces can be connected to the antenna or flexible waveguide, depending on the configuration.

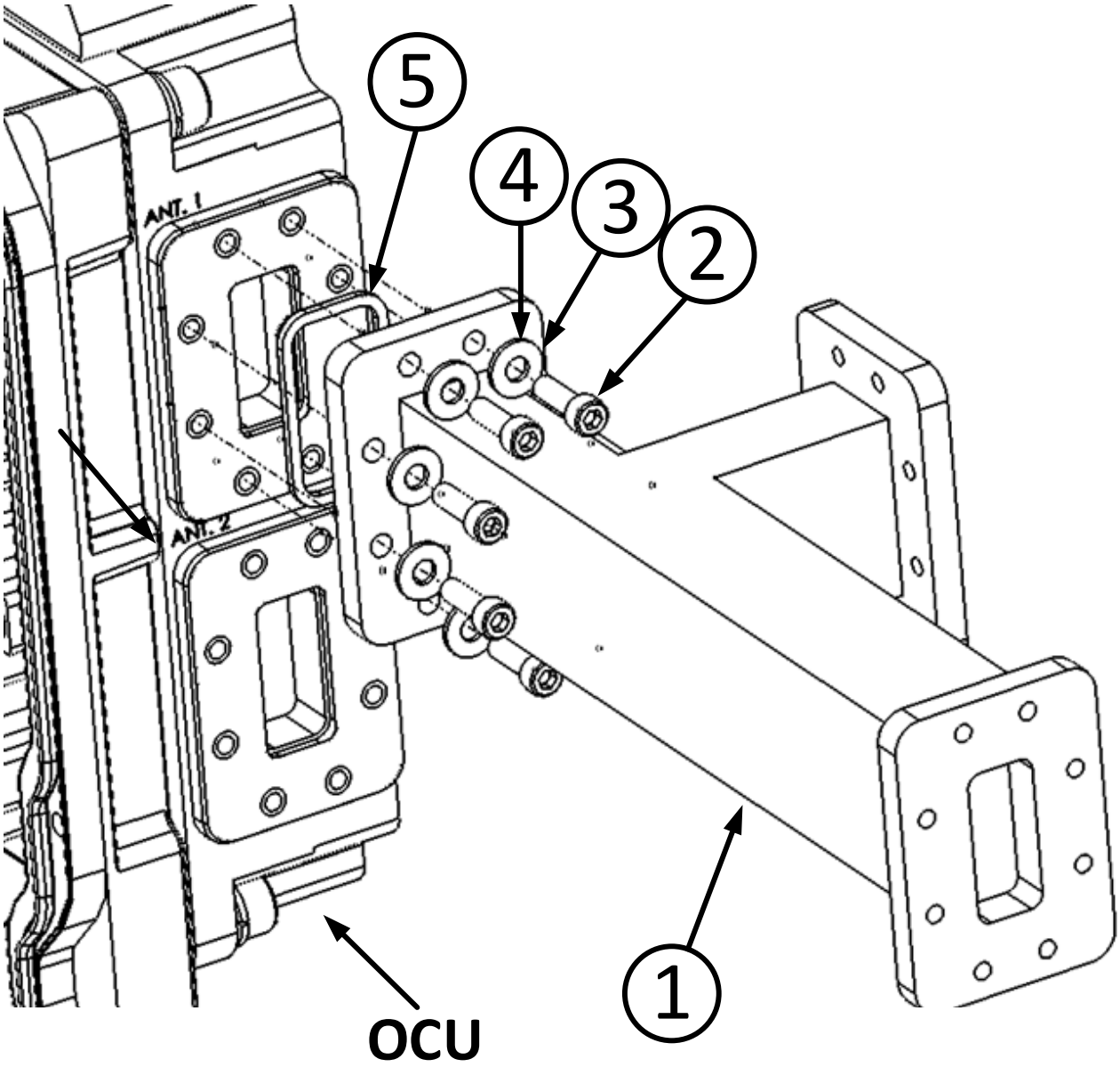

# Channel Filter-Based Branching – Configurations

## 2+0 Single Polarization

### List of Items

| Item | Description | Quantity | Model |
|---|---|---|---|
| 1 | PTP 820C HP Radio Unit | 1 | See Models for Radio Unit |
| 2 | PTP 820C HP Branching Pole Profile | 1 | Part of OCU Mounting kit, FXDH-RM-MOUNT-kit |
| 3 | PTP 820C HP Branching Pillar | 2 | Part of OCU Mounting kit, FXDH-RM-MOUNT-kit |
| 4 | PTP 820C HP OCU Kit | 1 | See Models for OCU Unit |
| 5 | PTP 820C HP Termination Kit | 1 | |
| 6 | Flexible Waveguides | 2 | |

#### Procedure

1. Assemble the OCU Mounting Kit. See Assembling the OCU Mounting Kit.
2. Assemble the OCU, attach the PTP 820C HP radio to the OCU, and connect the radio-OCU assembly to the Branching Pole Profile. Use a Left Rail Configuration to assemble the OCU. See Assembling the OCU.
3. On the side of the OCU facing the pole, attach a Termination to the lower radio port. See Assembling a Termination.
4. Connect a flexible waveguide from the lower radio port of the OCU on the side facing away from the pole to the upper radio port of the OCU on the side facing towards the pole.

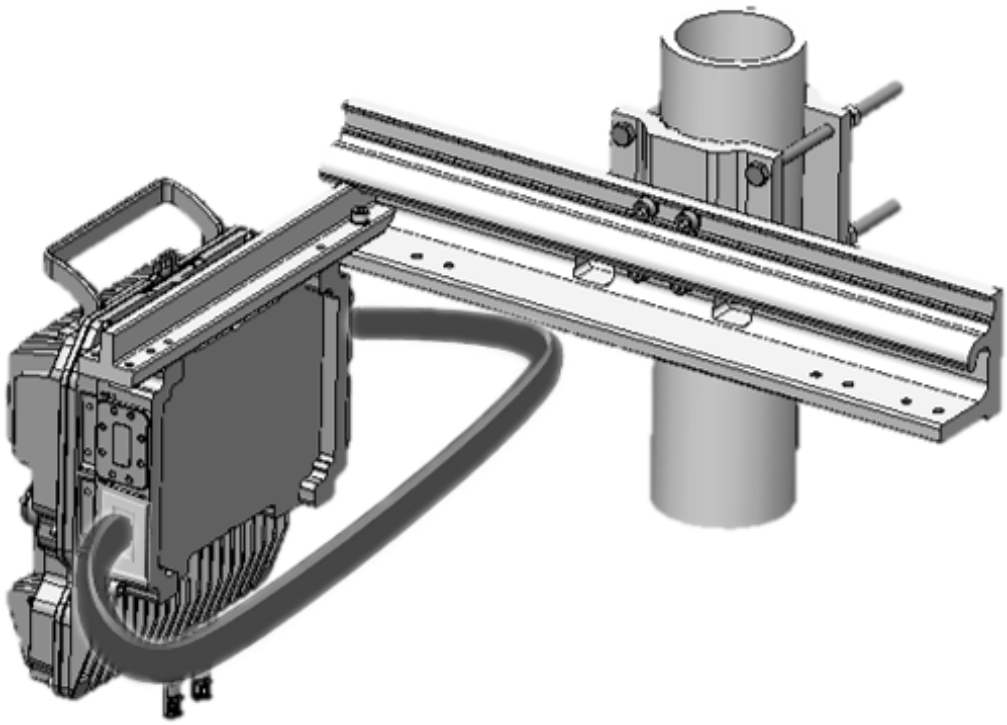

5. Connect a flexible waveguide from the upper radio port of the OCU on the side facing away from the pole to the antenna.

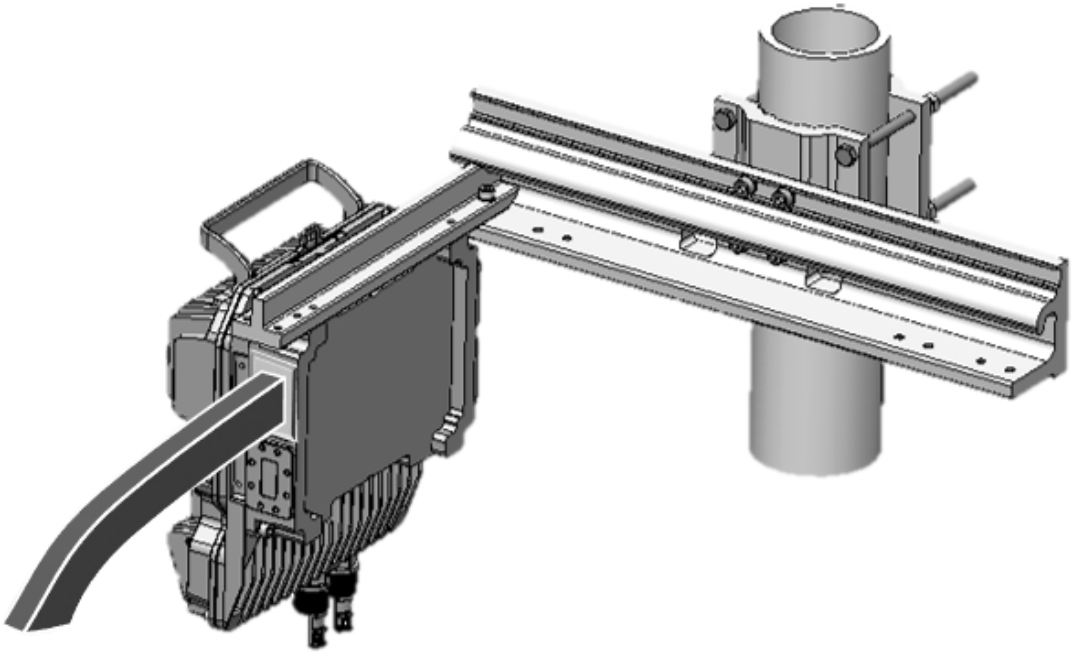

# 2+0 Dual Polarization

### List of Items

| Item | Description | Quantity | Model |
|---|---|---|---|
| 1 | PTP 820C HP Radio Unit | 1 | See Models for Radio Unit |
| 2 | PTP 820C HP Branching Pole Profile | 1 | Part of OCU Mounting kit, FXDH-RM-MOUNT-kit |
| 3 | PTP 820C HP Branching Pillar | 2 | Part of OCU Mounting kit, FXDH-RM-MOUNT-kit |
| 4 | PTP 820C HP OCU Kit | 1 | See Models for OCU Unit |
| 5 | PTP 820C HP Termination Kit | 2 | |
| 6 | PTP 820C HP OMT Kit | 1 | |
| 7 | Flexible Waveguide Kit | 2 | |

### Procedure

1. Assemble the OCU Mounting Kit. See Assembling the OCU Mounting Kit.
2. Assemble the OCU, attach the PTP 820C HP radio to the OCU, and connect the radio-OCU assembly to the Branching Pole Profile. Use a Left Rail Configuration to assemble the OCU. See Assembling the OCU.
3. On the side of the OCU facing the pole, attach a Termination to each radio port. See Assembling a Termination.
4. Connect the OMT to the antenna. See Steps 1-4 in 2+0 Dual Polarization Remote Mount.

1 On the side of the OCU facing away from the pole, connect the flexible waveguides between the radio ports and the OMT.

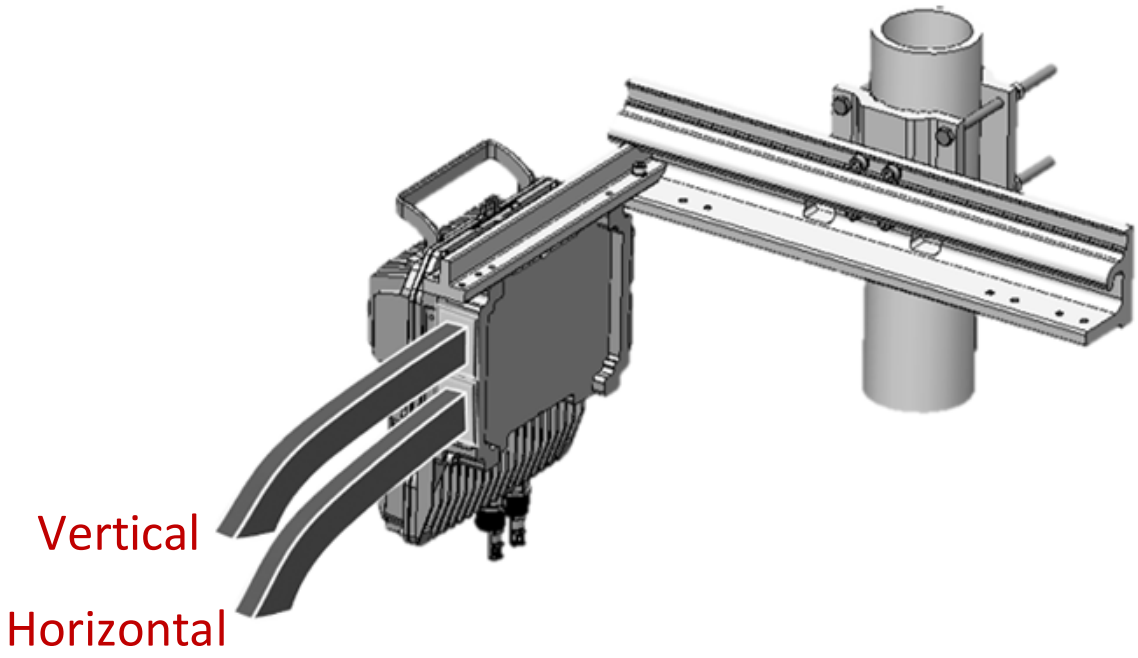

# 4+0 Single Polarization

### List of Items

| Item | Description | Quantity | Model |
|---|---|---|---|
| 1 | PTP 820C HP Radio Unit | 2 | See Models for Radio Unit |
| 2 | PTP 820C HP Branching Pole Profile | 1 | Part of OCU Mounting kit, FXDH-RM-MOUNT-kit |
| 3 | PTP 820C HP Branching Pillar | 2 | Part of OCU Mounting kit, FXDH-RM-MOUNT-kit |
| 4 | PTP 820C HP OCU Kit | 2 | See Models for OCU Unit |
| 5 | PTP 820C HP Termination Kit | 1 | |
| 6 | PTP 820C HP Branching Short U-Bend Kit | 2 | |
| 7 | Flexible Waveguides | 2 | |

### Procedure

1. Assemble the OCU Mounting Kit. See Assembling the OCU Mounting Kit.
2. Assemble an OCU using a Left Rail Configuration, attach the PTP 820C HP radio to the OCU, and connect the radio-OCU assembly to the Branching Pole Profile. See Assembling the OCU.
3. Assemble the second OCU using a Right Rail Configuration, attach the second PTP 820C HP radio to the OCU, and connect the radio-OCU assembly to the Branching Pole Profile. See Assembling the OCU.
4. On the side of the OCU facing the pole, attach Short U-Bends between the radio ports of the two OCUs. See Assembling a Short U-Bend.
5. On the side facing away from the pole:

- Connect a flexible waveguide from the lower radio port of the OCU on the left to the upper radio port of the OCU on the right.
- Connect a flexible waveguide from the upper radio port of the OCU on the left to the antenna.
- Connect a Termination to the lower radio port of the OCU on the right. See Assembling a Termination.

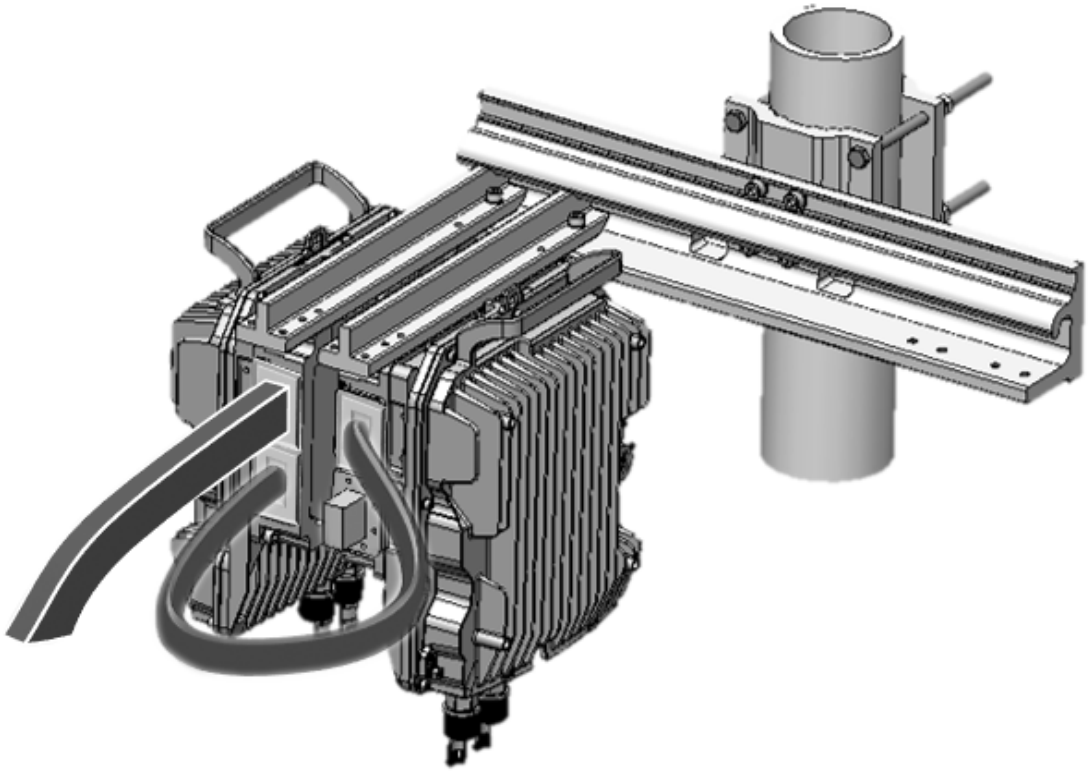

# 4+0 Dual Polarization

### List of Items

| Item | Description | Quantity | Model |
|---|---|---|---|
| 1 | PTP 820C HP Radio Unit | 2 | See Models for Radio Unit |
| 2 | PTP 820C HP Branching Pole Profile | 1 | Part of OCU Mounting kit, FXDH-RM-MOUNT-kit |
| 3 | PTP 820C HP Branching Pillar | 2 | Part of OCU Mounting kit, FXDH-RM-MOUNT-kit |
| 4 | PTP 820C HP OCU Kit | 2 | See Models for OCU Unit |
| 5 | PTP 820C HP Termination Kit | 2 | |
| 6 | PTP 820C HP Branching Short U-Bend Kit | 2 | |
| 7 | PTP 820C HP OMT Kit | 1 | |
| 8 | Flexible Waveguides | 2 | |

### Procedure

1. Assemble the OCU Mounting Kit. See Assembling the OCU Mounting Kit.
2. Assemble an OCU using a Left Rail Configuration, attach the an PTP 820C HP radio to the OCU, and connect the radio-OCU assembly to the Branching Pole Profile. See Assembling the OCU.
3. Assemble the second OCU using a Right Rail Configuration, attach the second PTP 820C HP radio to the OCU, and connect the radio-OCU assembly to the Branching Pole Profile. See Assembling the OCU.
4. On the side of the OCU facing the pole, attach Short U-Bends between the radio ports of the two OCUs. See Assembling a Short U-Bend.
5. Connect the OMT to the antenna. See Steps 1-4 in 2+0 Dual Polarization Remote Mount.
6. On the side facing away from the pole:
   - Connect flexible waveguides from both radio ports of the OCU on the left to the OMT.
   - Connect Terminations to both radio ports of the OCU on the right. See Assembling a Termination.

# 6+0 Single Polarization

### List of Items

| Item | Description | Quantity | Model |
|---|---|---|---|
| 1 | PTP 820C HP Radio Unit | 3 | See Models for Radio Unit |
| 2 | PTP 820C HP Branching Pole Profile | 1 | Part of OCU Mounting kit, FXDH-RM-MOUNT-kit |
| 3 | PTP 820C HP Branching Pillar | 2 | Part of OCU Mounting kit, FXDH-RM-MOUNT-kit |
| 4 | PTP 820C HP OCU Kit | 3 | See Models for OCU Unit |
| 5 | PTP 820C HP Termination Kit | 1 | |
| 6 | PTP 820C HP Branching Short U-Bend Kit | 2 | |
| 7 | PTP 820C HP Branching Long U-Bend Kit | 1 | |
| 8 | Flexible Waveguides | 3 | |

## Procedure

1. Assemble the OCU Mounting Kit. See Assembling the OCU Mounting Kit.
2. Assemble three OCUs, two using a Left Rail Configuration and one using a Right Rail Configuration. Attach an PTP 820C HP radio to each OCU and connect the radio-OCU assemblies to the Branching Pole Profile as shown in the following figure. See Assembling the OCU.

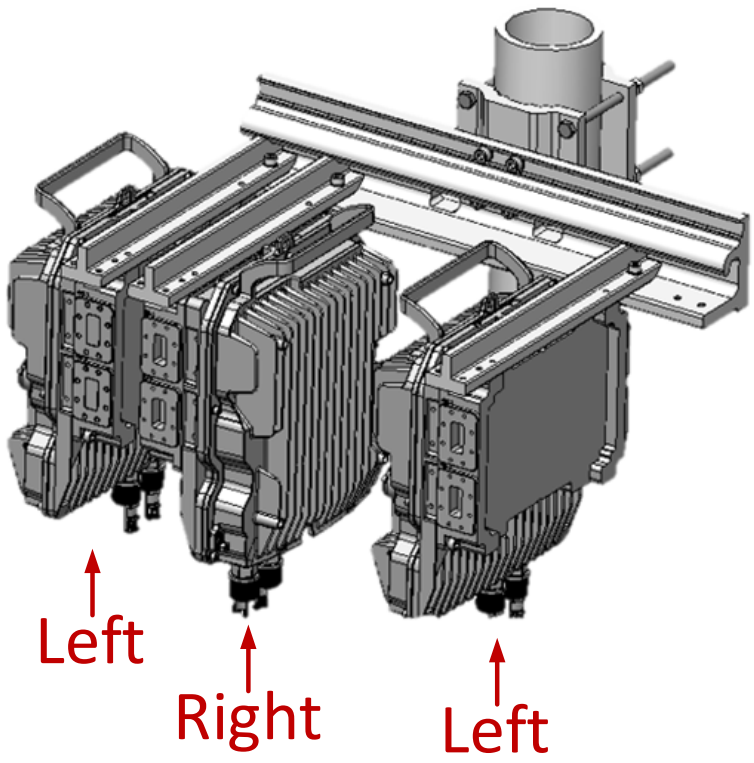


3. On the side of the OCU facing the pole:
4. Attach Short U-Bends between the radio ports of the two OCUs. See Assembling a Short U-Bend.
5. Attach a Termination to the upper radio port of the OCU on the right. See Assembling a Termination.

6. On the side facing away from the pole:
7. Connect a flexible waveguide from the upper radio port of the OCU on the left to the antenna.
8. Connect a flexible waveguide from the lower radio port of the OCU on the left to the upper radio port of the adjacent OCU.
9. Connect a Long U-Bend between the lower radio port of the middle OCU and the lower radio port of the OCU on the right. See Assembling a Long U-Bend.
10. On the OCU on the right, connect a flexible waveguide from the upper radio port to the lower radio port on the side of the OCU facing the pole.

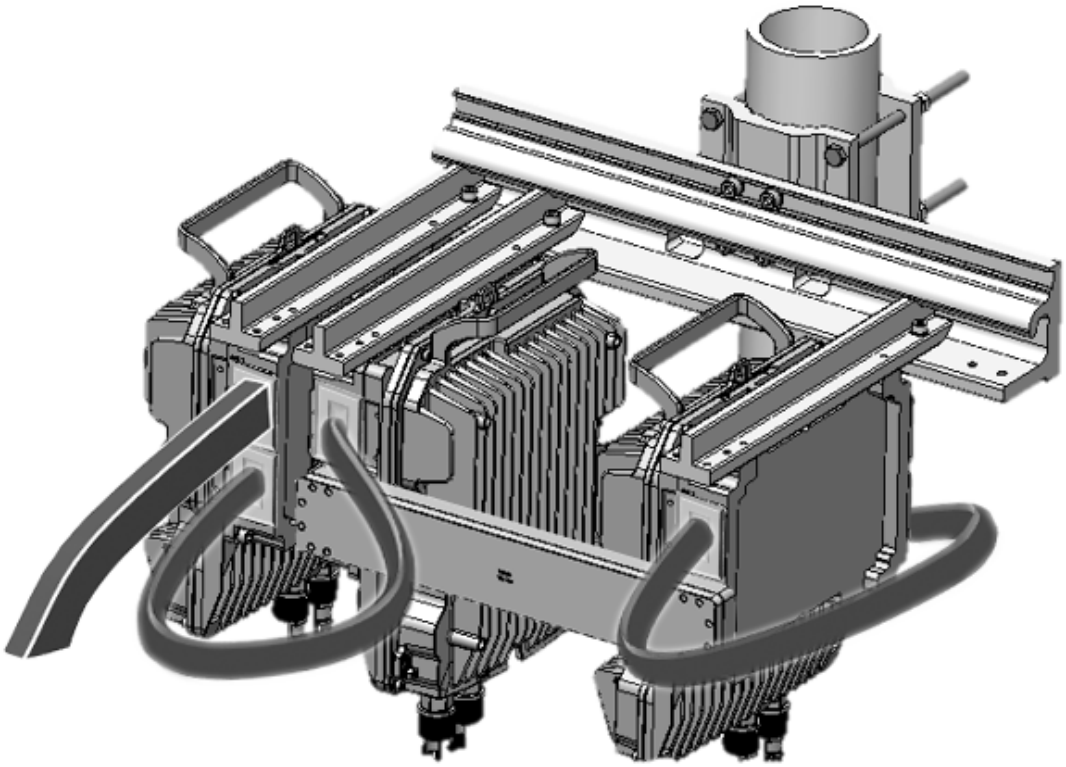

# 6+0 Dual Polarization

### List of Items

| Item | Description | Quantity | Model |
|---|---|---|---|
| 1 | PTP 820C HP Radio Unit | 3 | See Models for Radio Unit |
| 2 | PTP 820C HP Branching Pole Profile | 1 | Part of OCU Mounting kit, FXDH-RM-MOUNT-kit |
| 3 | PTP 820C HP Branching Pillar | 2 | Part of OCU Mounting kit, FXDH-RM-MOUNT-kit |
| 4 | PTP 820C HP OCU Kit | 3 | See Models for OCU Unit |
| 5 | PTP 820C HP Termination Kit | 2 | |
| 6 | PTP 820C HP Branching Short U-Bend Kit | 2 | |
| 7 | PTP 820C HP Branching Long U-Bend Kit | 2 | |
| 8 | PTP 820C HP OMT Kit | 1 | |
| 9 | Flexible Waveguides | 2 | |

### Procedure

1. Assemble the OCU Mounting Kit. See Assembling the OCU Mounting Kit.
2. Assemble three OCUs, two using a Left Rail Configuration and one using a Right Rail Configuration. Attach an PTP 820C HP radio to each OCU and connect the radio-OCU assemblies to the Branching Pole Profile as shown in the following figure. See Assembling the OCU.

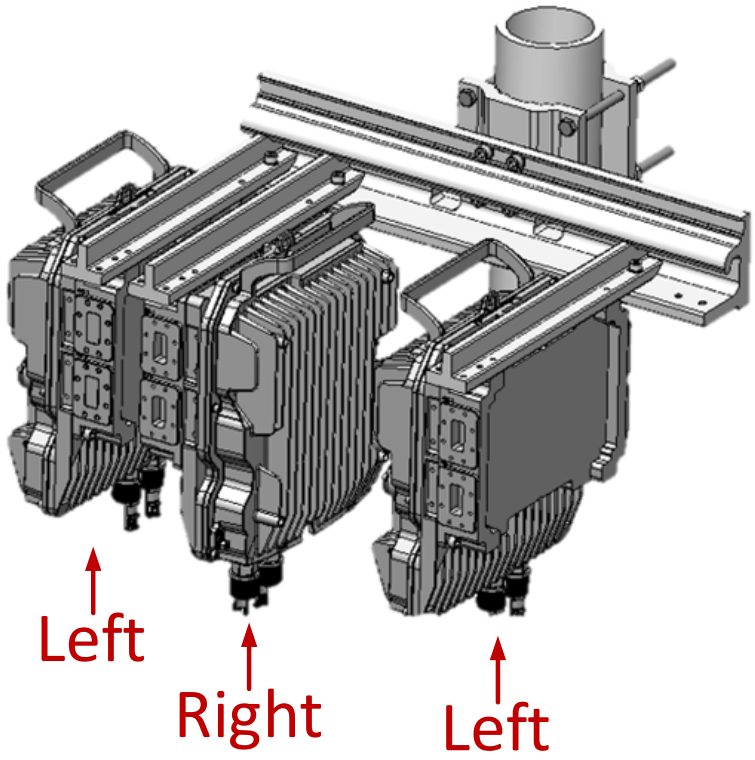


3. On the side of the OCU facing the pole:
4. Attach Short U-Bends between the radio ports of the two OCUs. See Assembling a Short U-Bend.
5. Attach a Termination to each radio port of the OCU on the right. See Assembling a Termination.
6. Connect the OMT to the antenna. See Steps 1-4 in 2+0 Dual Polarization Remote Mount.

7. On the side facing away from the pole:
8. On the OCU to the left, connect a flexible waveguide from each radio port of the OCU to the OMT.
9. Connect a Long U-Bend between each set of radio ports on the two OCUs to the right. See Assembling a Long U-Bend.

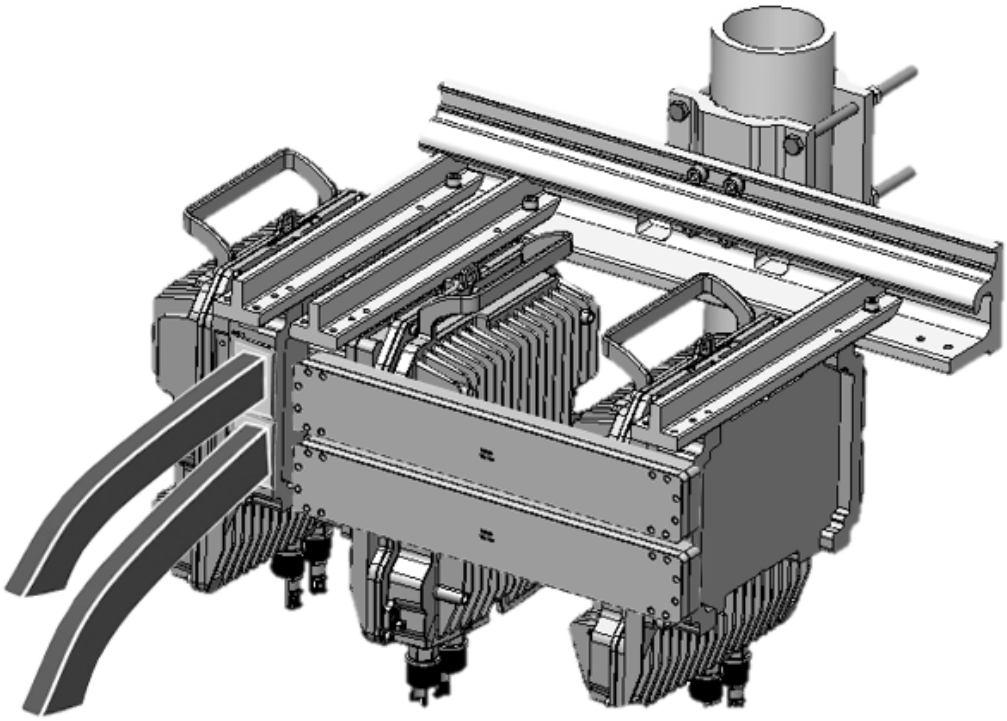

# 8+0 Single Polarization

### List of Items

| Item | Description | Quantity | Model |
|---|---|---|---|
| 1 | PTP 820C HP Radio Unit | 4 | See Models for Radio Unit |
| 2 | PTP 820C HP Branching Pole Profile | 1 | Part of OCU Mounting kit, FXDH-RM-MOUNT-kit |
| 3 | PTP 820C HP Branching Pillar | 2 | Part of OCU Mounting kit, FXDH-RM-MOUNT-kit |
| 4 | PTP 820C HP OCU Kit | 4 | See Models for OCU Unit. |
| 5 | PTP 820C HP Termination Kit | 1 | |
| 6 | PTP 820C HP Branching Short U-Bend Kit | 4 | |
| 7 | PTP 820C HP Branching Long U-Bend Kit | 1 | |
| 8 | Flexible Waveguides | 3 | |

## Procedure

1. Assemble the OCU Mounting Kit. See Assembling the OCU Mounting Kit.
2. Assemble four OCUs, two using a Left Rail Configuration and two using a Right Rail Configuration. Attach an PTP 820C HP radio to each OCU and connect the radio-OCU assemblies to the Branching Pole Profile as shown in the following figure. See Assembling the OCU.

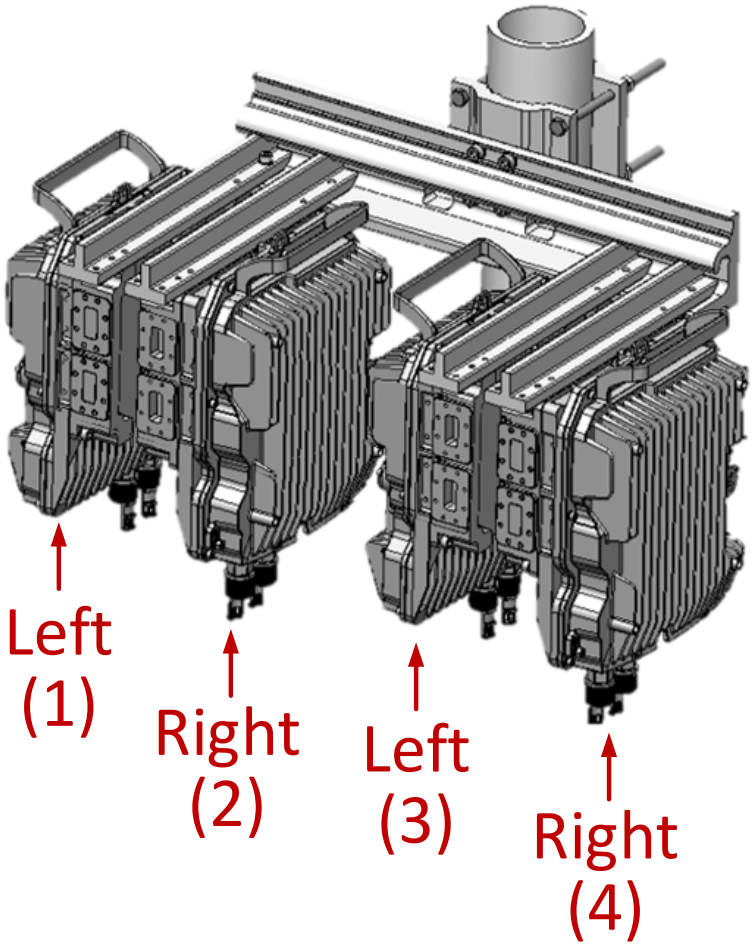


3. On the side of the OCU facing the pole, for each pair of adjacent OCUs attach two Short U-Bends between the adjacent radio ports. See Assembling a Short U-Bend.

4. On the side facing away from the pole (refer to the numbering in the figure above):
5. Connect a flexible waveguide from the upper radio port of OCU 1 to the lower radio port of OCU 2.
6. Connect a flexible waveguide from the lower radio port of OCU 1 to the antenna.
7. Connect a flexible waveguide from the lower radio port of OCU 3 to the upper radio port of OCU 4.
8. Connect a Long U-Bend between the upper radio port of OCU 2 and the upper radio port of OCU 3. See Assembling a Long U-Bend.
9. Attach a Termination to the lower radio port of OCU 4. See Assembling a Termination.

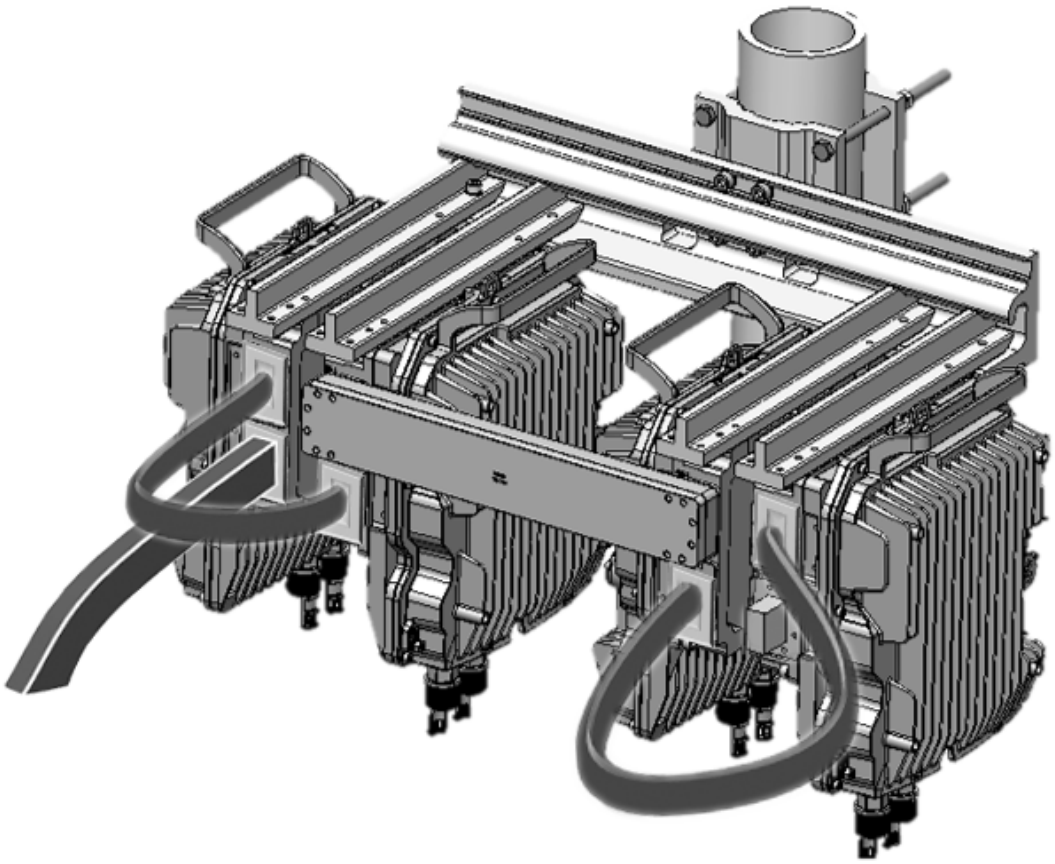

# 8+0 Dual Polarization

## List of Items

| Item | Description | Quantity | Model |
|---|---|---|---|
| 1 | PTP 820C HP Radio Unit | 4 | See Models for Radio Unit |
| 2 | PTP 820C HP Branching Pole Profile | 1 | Part of OCU Mounting kit, FXDH-RM-MOUNT-kit |
| 3 | PTP 820C HP Branching Pillar | 2 | Part of OCU Mounting kit, FXDH-RM-MOUNT-kit |
| 4 | PTP 820C HP OCU Kit | 4 | See Models for OCU Unit |
| 5 | PTP 820C HP Termination Kit | 2 | |
| 6 | PTP 820C HP Branching Short U-Bend Kit | 4 | |
| 7 | PTP 820C HP Branching Long U-Bend Kit | 2 | |
| 8 | PTP 820C HP OMT Kit | 1 | |
| 9 | Flexible Waveguides | 2 | |

## Procedure

1. Assemble the OCU Mounting Kit. See Assembling the OCU Mounting Kit.
2. Assemble four OCUs, two using a Left Rail Configuration and two using a Right Rail Configuration. Attach an PTP 820C HP radio to each OCU and connect the radio-OCU assemblies to the Branching Pole Profile as shown in the following figure. See Assembling the OCU.

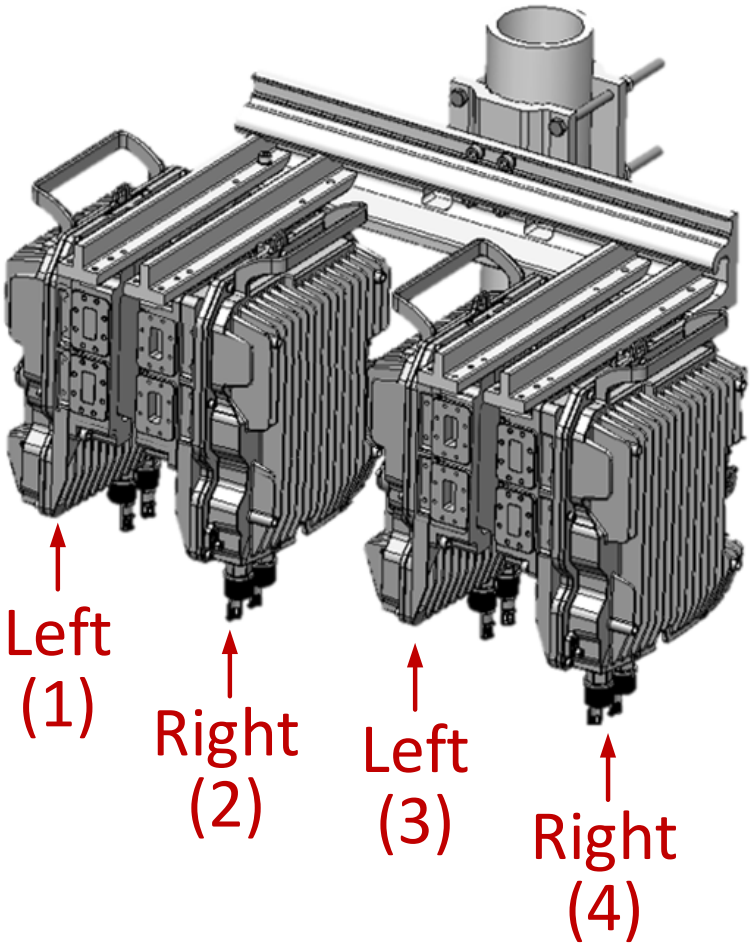


3. On the side of the OCU facing the pole, for each pair of adjacent OCUs attach two Short U-Bends between the adjacent radio ports. See Assembling a Short U-Bend.
4. Connect the OMT to the antenna. See Steps 1-4 in 2+0 Dual Polarization Remote Mount.

5. On the side facing away from the pole (refer to the numbering in the figure above):
6. Connect a flexible waveguide from each of the radio ports on OCU 1 to the OMT.
7. Connect Long U-Bends between the upper and lower radio ports of OCU 2 and OCU 3. See Assembling a Long U-Bend.
8. Attach a Termination to each radio port on OCU 4. See Assembling a Termination.

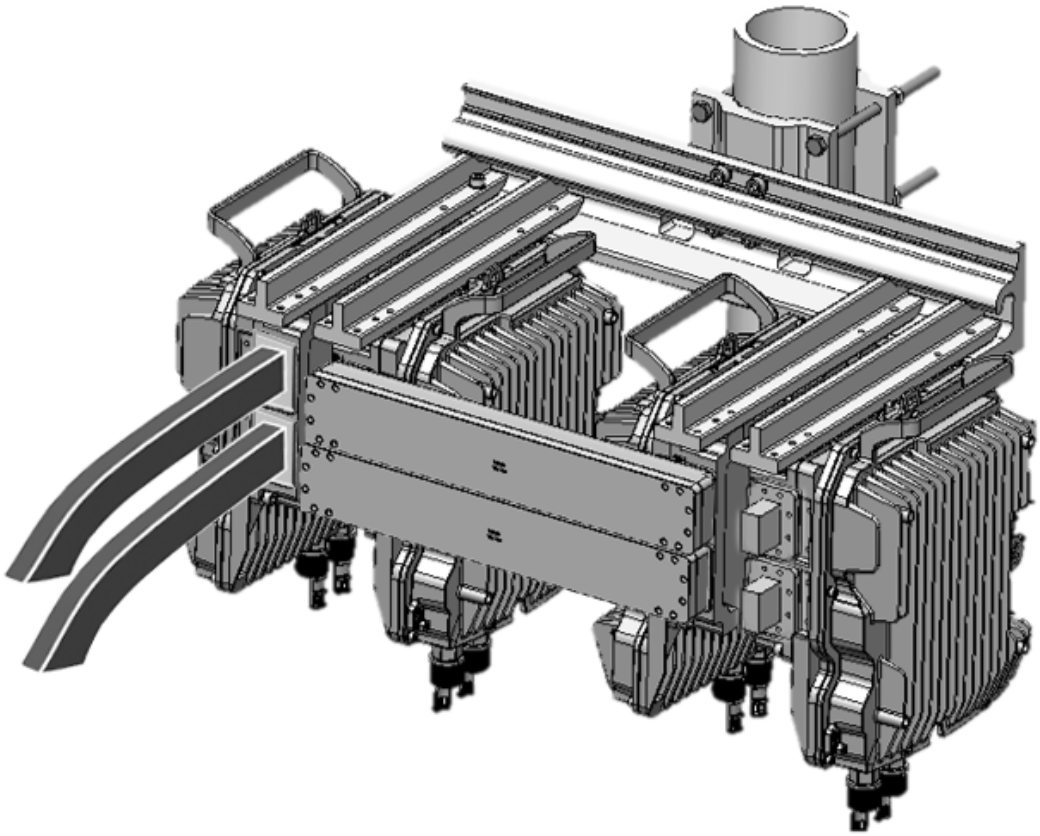

# 1+1 HSB

### List of Items

| Item | Description | Quantity | Model |
|---|---|---|---|
| 1 | PTP 820C HP Radio Unit | 2 | See Models for Radio Unit |
| 2 | PTP 820C HP Branching Pole Profile | 1 | Part of OCU Mounting kit, FXDH-RM-MOUNT-kit |
| 3 | PTP 820C HP Branching Pillar | 2 | Part of OCU Mounting kit, FXDH-RM-MOUNT-kit |
| 4 | PTP 820C HP OCU Kit | 2 | See Models for OCU Unit |
| 5 | PTP 820C HP Termination Kit | 6 | |
| 6 | PTP 820C HP Coupler Kit | 1 | |
| 7 | Flexible Waveguides | 2 | |

## Procedure

1. Assemble the OCU Mounting Kit. See Assembling the OCU Mounting Kit.
2. Assemble two OCUs, both using a Left Rail Configuration. Attach an PTP 820C HP radio to each OCU and connect the radio-OCU assemblies to the Branching Pole Profile as shown in the following figure. See Assembling the OCU.

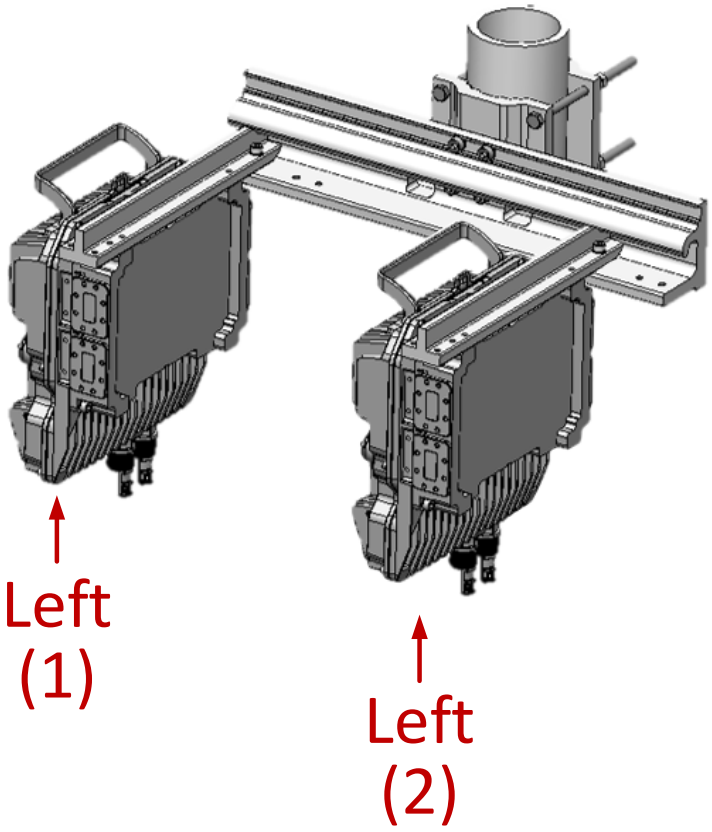

3. On the side of the OCU facing the pole, attach a Termination to each of the four radio ports. See Assembling a Termination.
4. On the side facing away from the pole (refer to the numbering in the figure above):
   - Connect a Coupler to the upper radio port of OCU 1. See Assembling a Splitter or Coupler for Filter-Based Branching.
   - Connect a flexible waveguide from the Coupler to the upper radio port of OCU 2.
   - Attach a Termination to each of the lower radio ports. See Assembling a Termination.

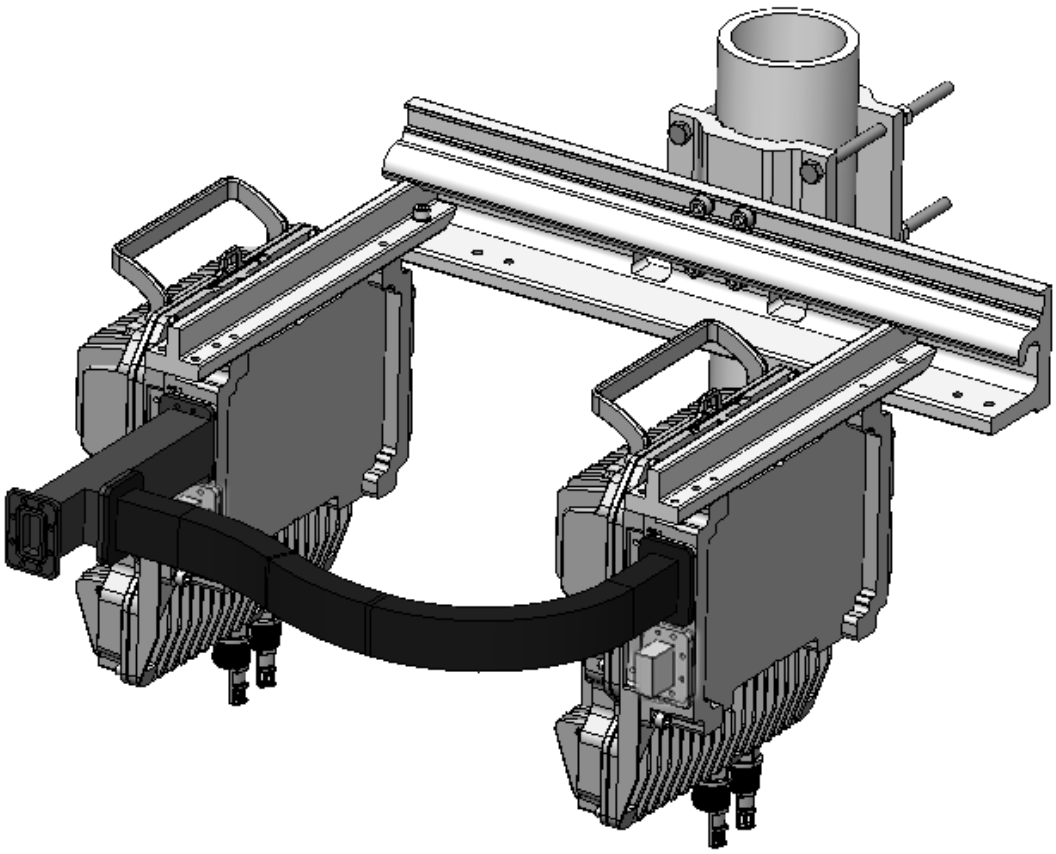

5. Attach a waveguide between the antenna and the Coupler.

# 2+2 HSB Single Polarization

### List of Items

| Item | Description | Quantity | Model |
|---|---|---|---|
| 1 | PTP 820C HP Radio Unit | 4 | See Models for Radio Unit |
| 2 | PTP 820C HP Branching Pole Profile | 1 | Part of OCU Mounting kit, FXDH-RM-MOUNT-kit |
| 3 | PTP 820C HP Branching Pillar | 2 | Part of OCU Mounting kit, FXDH-RM-MOUNT-kit |
| 4 | PTP 820C HP OCU Kit | 4 | See Models for OCU Unit |
| 5 | PTP 820C HP Termination Kit | 4 | |
| 6 | PTP 820C HP Branching Short U-Bend Kit | 4 | |
| 7 | PTP 820C HP Splitter Kit | Depends on Configuration | |
| 8 | PTP 820C HP SPLITTER KIT | 1 | |
| 9 | Flexible Waveguides | 2 | |

### Procedure

1. Prior to the installation, follow the antenna manufacturer's instructions to use the circular adaptor. (Remove the existing rectangular transition, swap the O-ring, and install the circular transition instead.)

2. Connect the OMT Kit to the antenna and secure it with four screws. Verify the existence of the O-ring.

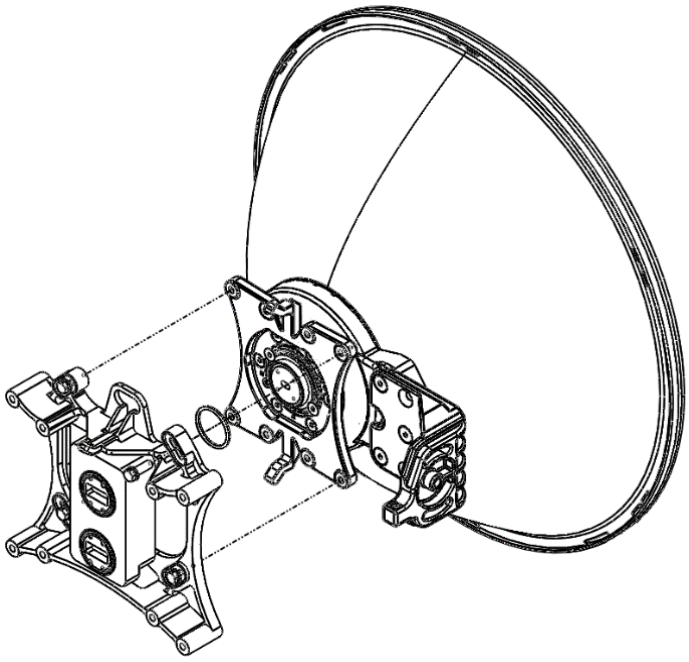

3. Mount and tighten the Remote Mount Adapter to the PTP 820C HP OMT ports using the screws supplied with the adapter kit.

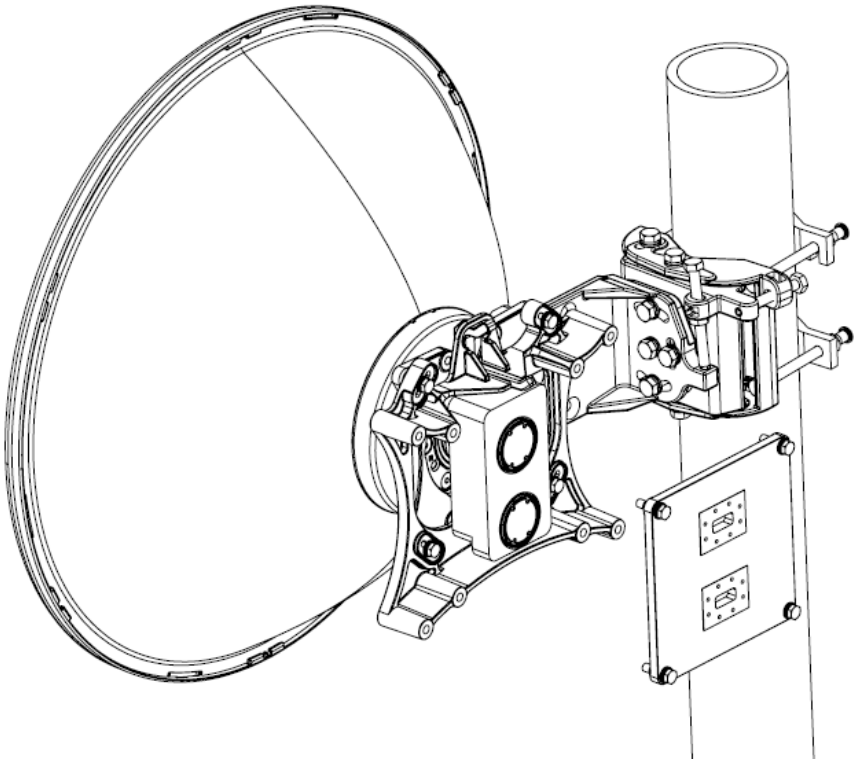

4. Mount and tighten the O-ring and the flexible waveguide to the adapter ports using the screws supplied with the flexible waveguide kit.

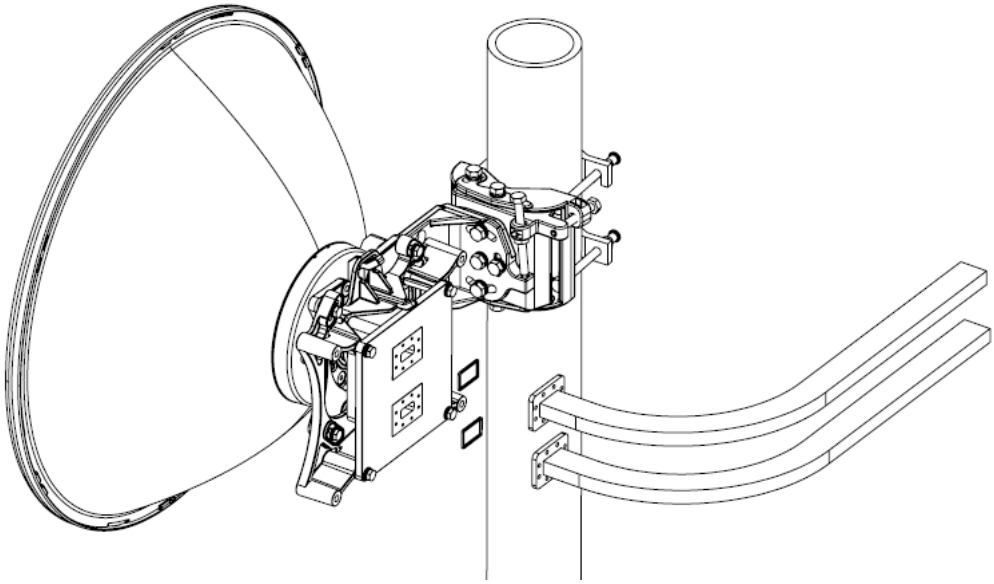

5. **Important:** Verify that the O-rings are correctly mounted between the OMT ports and each flexible waveguide.

6. Assemble the OCU Mounting Kit. See Assembling the OCU Mounting Kit.
7. Assemble four OCUs, two using a Left Rail Configuration and two using a Right Rail Configuration. Attach an PTP 820C HP radio to each OCU and connect the radio-OCU assemblies to the Branching Pole Profile as shown in the following figure. See Assembling the OCU.

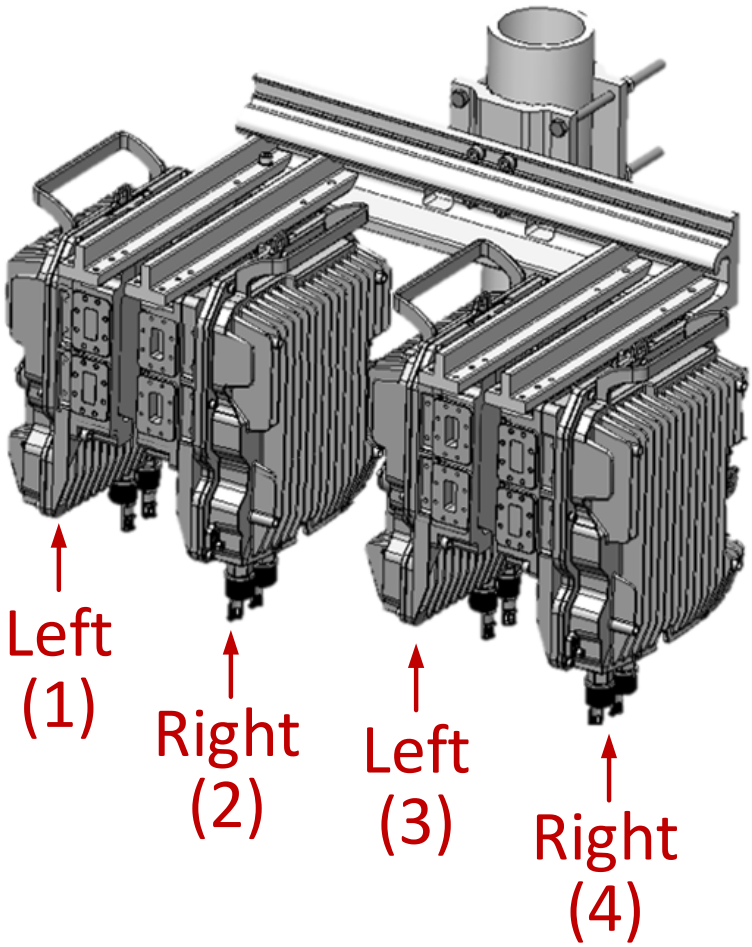


8. On the side of the OCU facing the pole, for each pair of adjacent OCUs attach two Short U-Bends between the adjacent radio ports. See Assembling a Short U-Bend.

9. On the side facing away from the pole (refer to the numbering in the figure above):
10. Connect a Splitter to each radio port of OCU 1. See Assembling a Splitter or Coupler for Filter-Based Branching.
11. Connect a flexible waveguide from the upper Splitter to the upper radio port of OCU 3.
12. Connect a flexible waveguide from the lower Splitter to the lower radio port of OCU 3.
13. Attach a Termination to each of the radio ports on OCU 2 and OCU 4. See Assembling a Termination.

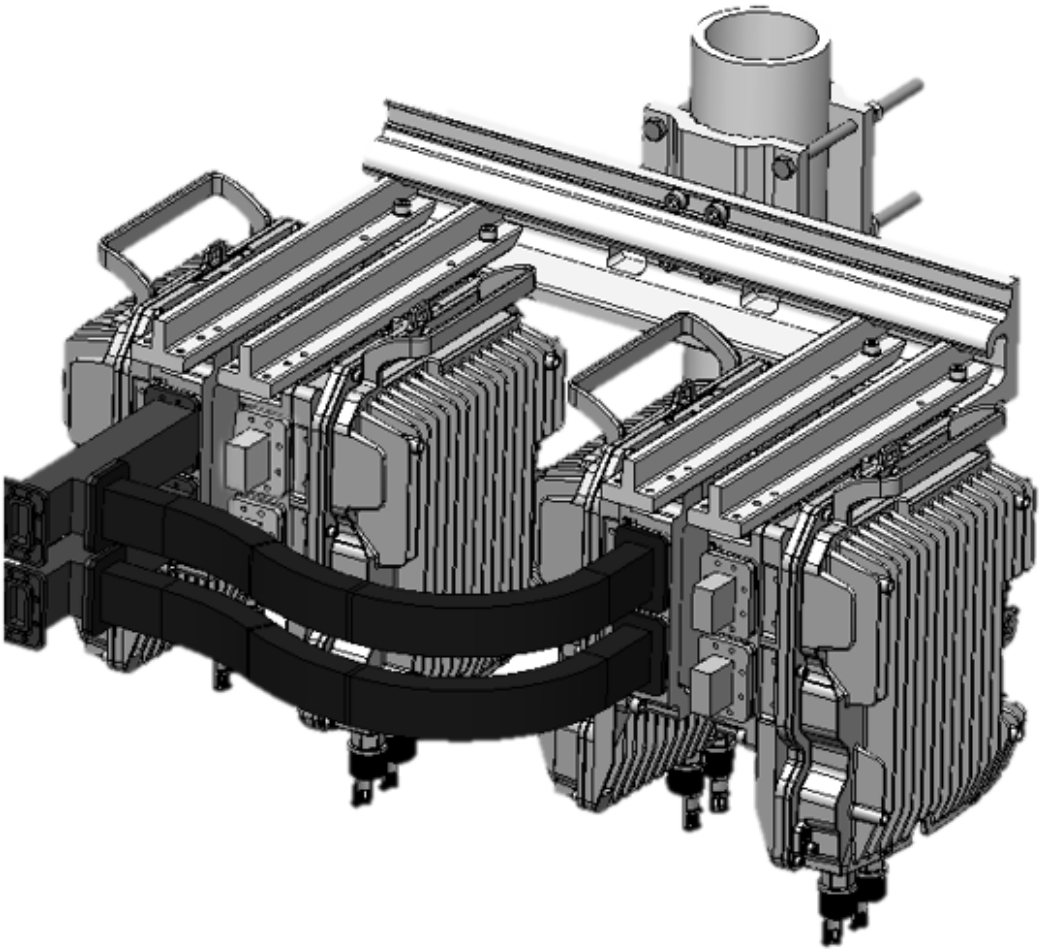

14. Attach waveguides between the Splitter connected to the antenna and the Splitters connected to OCU 1.

# 2+2 HSB Dual Polarization

### List of Items

| Item | Description | Quantity | Model |
|---|---|---|---|
| 1 | PTP 820C HP Radio Unit | 2 | See Models for Radio Unit |
| 2 | PTP 820C HP Branching Pole Profile | 1 | Part of OCU Mounting kit, FXDH-RM-MOUNT-kit |
| 3 | PTP 820C HP Branching Pillar | 2 | Part of OCU Mounting kit, FXDH-RM-MOUNT-kit |
| 4 | PTP 820C HP OCU Kit | 2 | See Models for OCU Unit |
| 5 | PTP 820C HP Termination Kit | 4 | |
| 6 | PTP 820C HP Coupler Kit | 2 | |
| 7 | PTP 820C HP OMT Kit | 1 | |
| 8 | Flexible Waveguides | 2 | |

## Procedure

1. Assemble the OCU Mounting Kit. See Assembling the OCU Mounting Kit.
2. Assemble two OCUs, both using a Left Rail Configuration. Attach an PTP 820C HP radio to each OCU, and connect the radio-OCU assemblies to the Branching Pole Profile as shown in the following figure. See Assembling the OCU.

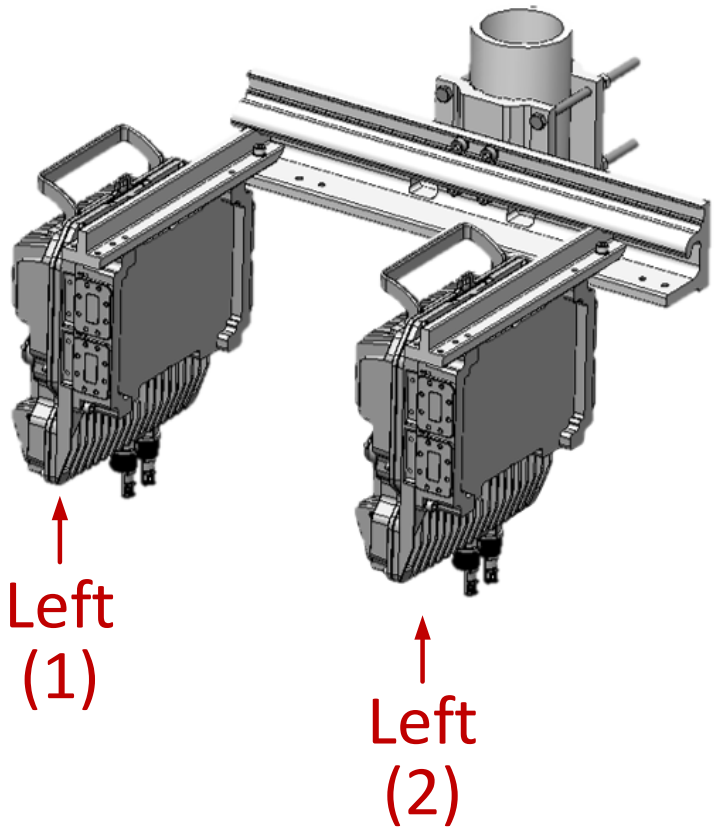


3. Connect the OMT to the antenna. See Steps 1-4 in 2+0 Dual Polarization Remote Mount.
4. On the side of the OCU facing the pole, attach a Termination to each of the four radio ports. See Assembling a Termination.

5. On the side facing away from the pole (refer to the numbering in the figure above):
6. Connect a Coupler to each radio port of OCU 1. See Assembling a Splitter or Coupler for Filter-Based Branching.
7. Connect a flexible waveguide from each Coupler to each radio port of OCU 2.

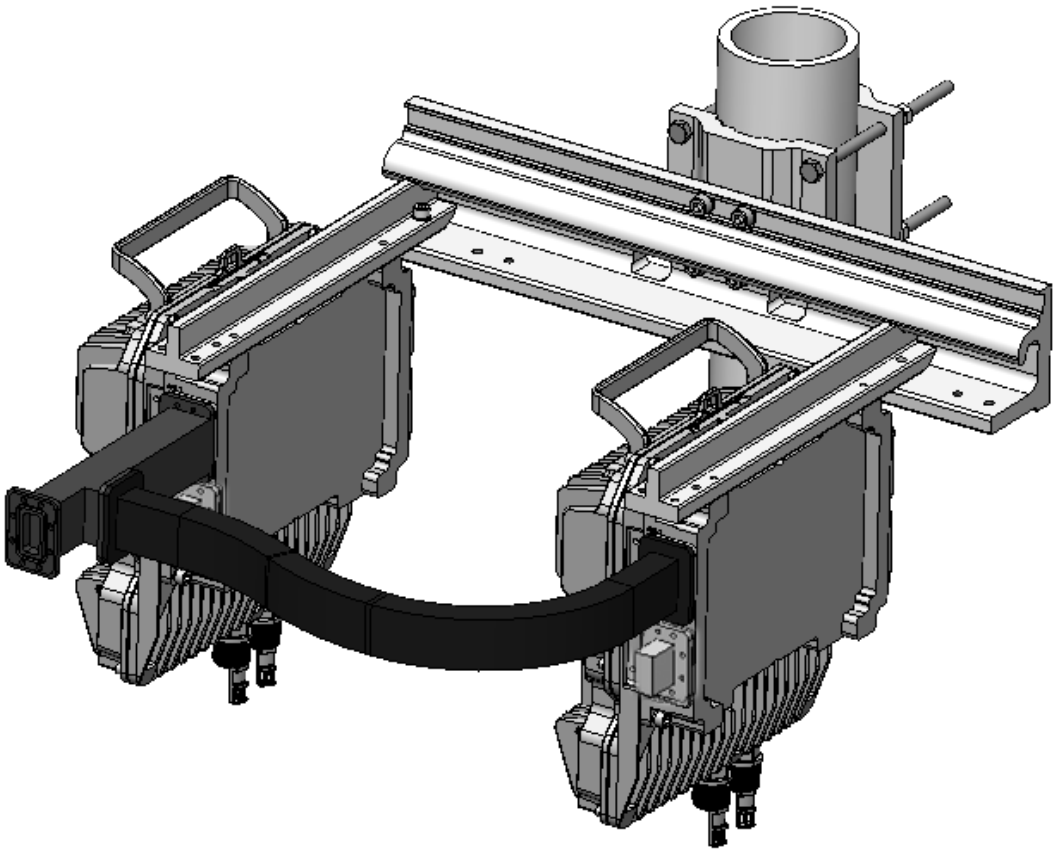

8. Attach a waveguide between the antenna and the Coupler.

# Chapter 9: Installing PTP 820C HP on Third-Party Antenna Adaptors

PTP 820C HP can be mounted to third party mediation devices throughPTP 820C HP mediation devices (OMT/Splitter)

Special attention must be taken in assembling these configurations, since most of the 3rd party adaptors can be used only for single polarization configurations

In general, once the correct 3rd party adaptor has been selected and installed on the antenna, the interface now is identical to a generic single pol. RFU-C interface.

The following tables describe available adaptors:

Table 21: 3rd-Party Adaptors

| PN | Description |
|---|---|
| N060082L004A | PTP 820 Andrew Valuline Antenna Convert kit, 6GHz |
| N110082L003A | PTP 820 Andrew Valuline Antenna Convert kit, 11GHz |
| N110082L004A | PTP820 Radiowave Antenna Conversion kit Exalt -> Cambium, 11 GHz, 2ft |
| N110082L005A | PTP820 Radiowave Antenna Conversion kit Exalt -> Cambium, 11 GHz, 3ft |
| N110082L006A | PTP820 Radiowave Antenna Conversion kit Exalt -> Cambium, 11 GHz, 4ft |
| N110082L007A | PTP820 Radiowave Antenna Conversion kit Exalt -> Cambium, 11 GHz, 6ft |
| N110082L008A | PTP820 Radiowave Antenna Conversion kit Dragonwave -> Cambium, 11 GHz, 3ft |
| N110082L009A | PTP820 Radiowave Antenna Conversion kit Dragonwave -> Cambium, 11 GHz, 4ft |
| N110082L010A | PTP820 Radiowave Antenna Conversion kit Dragonwave -> Cambium, 11 GHz, 6ft |
| N110082L011A | PTP820 Dragonwave Antenna Adaptor for Cambium, 11GHz |
| N060082L217A | PTP820 REMEC interface Antenna Adaptor Kit, 6 GHz, Single Pol |
| N110082L125A | PTP820 REMEC interface Antenna Adaptor Kit, 11 GHz, Single Pol |
| N110082L126A | PTP820 REMEC interface Antenna Adaptor Kit, 11 GHz, Dual Pol |

**Note**

For instructions how to install these third-party adaptors, refer to the RFU-C Installation Guide.

# Special Note on Converting ValuLine 3 Antennas

Models for ValuLine 3 antenna conversion kits are valid for most ValuLine 3 antennas, integrated or non-integrated. These conversion kits can also be used to convert CommScope ValuLine 3 antennas with the old Nera Evolution interface to RFU-C. The kits support the majority of CommScope's ValuLine 3 antennas, 1-6ft. However, since there are some unique cases in which CommScope provided special antennas which are not supported by these adaptors, it is recommended that you supply your Cambium Networks representative with a picture of the current antenna (back plain side), in order to confirm the antenna's compatibility prior to implementing this solution.

You can also check the following to determine whether the antenna is compatible with the conversion kit:

- Verify that the antenna is, in fact, a ValuLine 3 antenna.
- Verify that the back plate of the antenna has in its holding plate the six mounting holes shown in red in the figure below.

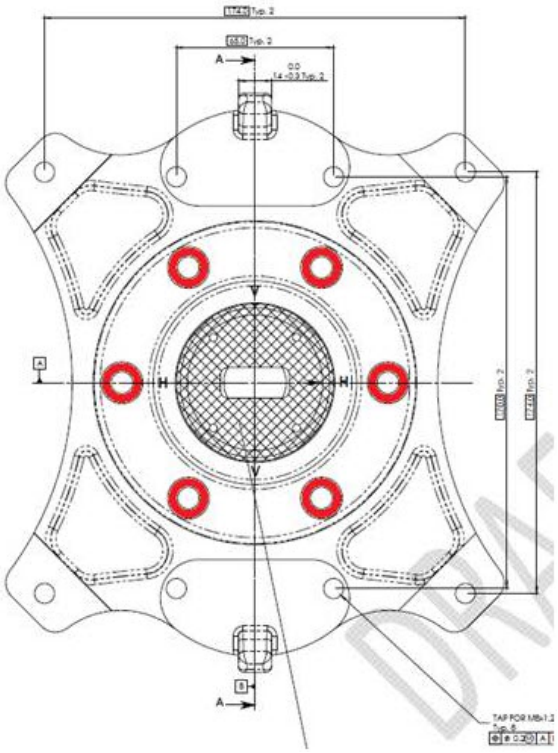

# Chapter 10: Acceptance and Commissioning Procedures

This chapter provides Cambium's recommended Acceptance and Commissioning Procedure for PTP 820. Acceptance and commissioning should be performed after initial setup is complete.

The purpose of this procedure is to verify correct installation and operation of the installed link and the interoperability with customer end equipment.

Cambium's Acceptance and Commissioning procedure includes the following stages:

- Site Acceptance Procedure
- Commissioning of Radio Link

The Site Acceptance Procedure is a checklist that summarizes the installation requirements of the site at which the products were installed.

The commissioning tests cover the required configuration information that should be recorded, and the tests that should be performed on the radio link.

# Site Acceptance Procedure

The purpose of the following procedures is to verify that all installation requirements were noted and checked. Following this procedure will ensure proper, long-lasting, and safe operation of the product.

The checklist below summarizes the installation requirements of the site.

| SITE ACCEPTANCE CHECKLIST | |
|---|---|
| **1. SITE INFORMATION** | |
| Customer: | |
| Radio model: | |
| Site name: | |
| Site code: | |
| Radio link code: | |
| Site address: | |
| **2. ANTENNA MOUNTING** | |
| Antenna mount type: | |
| Mount is of sufficient height to clear local obstructions | OK |
| Mount is safely positioned to not cause a safety hazard | OK |
| Mount is secure and perpendicular | OK |
| Mount is grounded as per site specifications | OK |
| All steelwork is Galvanized or Stainless Steel as appropriate | OK |
| **3. ANTENNA** | |
| Antenna type (model and size): | |
| Antenna is securely fixed to mount | OK |
| Antenna is grounded as per site specifications | OK |
| Antenna sway braces are installed correctly (where applicable) | OK |
| Antenna Radome is securely fitted (where applicable) | OK |
| Water drain plugs are fitted and removed, as appropriate | OK |
| Antenna sealing O-Ring is properly fitted and not damaged | OK |
| Antenna/Launch unit polarization is as per link requirements | OK |

| SITE ACCEPTANCE CHECKLIST (continued) | |
|---|---|
| **4. OUTDOOR UNIT** | |
| Type of ODU mount: | (Direct or Remote mount) |
| ODU is securely mounted to the antenna or pole | OK |
| ODU is grounded as per installation instructions | OK |
| ODU's polarization is as per link requirements | OK |
| ODU is installed properly and has no physical damage | OK |
| ***For Remote-Mount Only:*** | |
| Remote mount kit is securely mounted to the pole | OK |
| Flexible waveguide has no physical damage and connectors are sealed | OK |
| All flexible waveguide bolts are secured using washers and lock-washers, as appropriate | OK |
| Flexible waveguide is secured to the pole | OK |
| **6. CAT5/Fiber Optic CABLE** | |
| Overall cable length: | |
| Cable type: | |
| CAT5 connectors assembled properly on the cable | OK |
| Cable connected securely to ODU and IDU | OK |
| Cable connector is covered by gland and secure by cable tie at the ODU | OK |
| At the ODU, cable has a service/drip loop to prevent moisture from entering the connector | OK |
| Cable is secured using suitable restraints to fixed points at regular intervals (0.5 m recommended) | OK |
| Cable has no sharp bends, kinks, or crushed areas. All bends are per manufacturer specifications | OK |
| Grounding is as per site specifications | OK |
| Cable point-of-entry to building/shelter is weather-proof | OK |
| Cable ends are properly labeled | OK |

| SITE ACCEPTANCE CHECKLIST (continued) | |
|---|---|
| **7. FLEXIBLE WAVEGUIDE** | |
| Overall flexible WG length: | |
| Flexible WG type: | |
| Flexible WG is connected securely to ODU and Antenna | OK |
| Flexible WG connector is weather-proofed (sealed) at the ODU | OK |
| At the ODU, the flexible WG has a service/drip loop to prevent moisture from entering the connector | OK |
| Flexible WG is secured using suitable restraints to fixed points at regular intervals (0.5 m recommended) | OK |
| Flexible WG has no sharp bends, kinks, or crushed areas. All bends are per manufacturer specifications | OK |
| Flexible WG point-of-entry to building/shelter is weather-proof | OK |
| Flexible WG ends are properly labeled | OK |
| **8. DC POWER SUPPLY - Two Inputs** | |
| Measured DC voltage input to the IDU: | (-40.5 to -60 VDC) |
| Power-Supply maximum current: | |
| Power-Supply is properly grounded | OK |
| DC power backup type: | |
| IDU DC connector is secure and the DC input leads are correctly terminated (no bare wires are visible) | OK |
| IDU DC connector (+) and (GND) leads are shorted and GND is grounded | OK |
| **9. RACK INSTALLATION** | |
| Rack is mounted to the shelter floor with four screws | OK |
| Rack is mounted to the shelter wall with two screws | OK |

| SITE ACCEPTANCE CHECKLIST (continued) | |
|---|---|
| **10. REMARKS/NOTES** | |
| | |
| | |
| | |
| **11. GENERAL INFORMATION** | |
| Site accepted by: | Name: |
| | Title: |
| | Company: |
| | Signature: |
| | Date: |
| Site approved by: | Name: |
| | Title: |
| | Company: |
| | Signature: |
| | Date: |

# Site Acceptance Checklist Notes

The following notes provide important additional information about the Site Acceptance Checklist.

1. Antenna Mounting
    - Mounting pole is of sufficient height to clear local obstructions, such as parapets, window cleaning gantries, and lift housings.
    - Mounting Pole is of sufficient height, and is safely positioned, so as not to cause a safety hazard. No person should be able to walk in front of, or look directly into the path of the microwave radio beam. Where possible, the pole should be away from the edge of the building.
    - Mounting pole is secure and perpendicular. A pole that is not perpendicular may cause problems during antenna alignment.
    - Mounting pole is grounded as per site specifications. All operators and site owners have specific requirements regarding the grounding of installations. As a minimum, typical requirements are such that any metal structure must be connected to the existing lightning protection ground of the building. Where it extends beyond the 45 degree cone of protection of existing lightning conductors, additional lightning protectors should be installed.
    - All steelwork is Galvanized or Stainless Steel, as appropriate to prevent corrosion.
2. Antenna
    - Antenna is grounded as per site specifications. See the third point in the Antenna Mounting section above.
    - Antenna sway braces are fitted and installed correctly, where applicable. Typically, for an antenna of 1.2 m or larger, an extra sway brace is fitted to the mounting frame of the antenna. This sway brace should not be mounted to the same pole as the antenna, but should be installed directly back to the tower or an alternative point.
    - Antenna Water Drain Plugs are fitted and removed, where appropriate. Some antennas have moisture drain plugs installed at various points around the antenna. The purpose of these plugs is to allow any moisture that forms on the inside of the antenna or radome to drip out and prevent a pool within the antenna. Only the plugs at the bottom of the antenna, after installation, should be removed. All other plugs should be left in position.
3. ODU (Outdoor Unit)
    - The ODU is grounded as per installation instructions. See the third point in the Antenna Mounting section above.
    - The ODU polarization is as per link requirements and matches the polarization of the antenna.
    - The main traffic connections are correctly terminated and crimped as per cable and connector manufacturer instructions. All fiber optic patch leads should be routed carefully and efficiently, using conduits to prevent damage to the cables.
    - All other user terminations are secure and correctly terminated.
    - All labeling is complete as per site requirements. Labeling is specific to each customer. At a site with only one installation, labeling may be unnecessary. However, at sites with multiple installations, correct and adequate labeling is essential for future maintenance operations.

Typical labeling requirements include:

- Antenna labels - for link identity and bearing
- ODU labels - for link identity, frequency, and polarization
- Cat5/Fiber cable labels - for link identity, close to the ODU, switch, and either end of any joint
- Switch labels - for link identity

# Radio Link Commissioning Procedure

## Scope

This section describes the recommended commissioning tests for PTP 820 radio link in a 1+0 configuration.

The purpose of the commissioning tests is to verify correct and proper operation of the product.

## Commissioning Test

The following tests should be performed on each installed link.

### Link Verification

- Received Signal Level (RSL) is up to +/- 4 dB from the expected (calculated) level at both ends of the link.[2]
- Radio Bit Error Rate (BER) is $10E^{-11}$ or lower.
- If working with ATPC, ATPC is operating as expected (RSL = reference level).

### Ethernet Line Interfaces Test

- Connect Ethernet Packet Analyzer to the GbE port. Use physical loop at remote end (or connect second analyzer). Run Packet Loss test for at least one hour (load rate as per Cambium's specifications for the chosen MRMC).
- Connect Ethernet Packet Analyzer to the FE port. Use physical loop at remote end (or connect second analyzer). Run Packet Loss test for at least one hour (load rate as per Cambium's specifications for the chosen MRMC).

### Interoperability Verification

- Connect customer end equipment to the line interfaces, and verify correct operation.
- Further interoperability tests should be performed in accordance with the specific requirements of the connected end equipment.

---

1 [2]The voltage at the BNC port is 1.XX where XX is the RSL level. For example: 1.59V means an RSL of -59 dBm. Note that the voltage measured at the BNC port is not accurate and should be used only as an aid).

### Management Verification

- Launch the HTTP management and verify that you can manage the link and that you are able to perform changes to the link configuration (frequency channel, Tx power, system name, time & date, etc.)
- Verify that correct parameters are reported when performing the above.
- Verify that there are no active alarms on the link.
- If the management station is located at a remote site (Network Operation Center), verify that the management station can manage the link and receive traps.

# PTP 820 Commissioning Log

The Commissioning Log is an integral part of the commissioning procedure and should be filled in for each installed link.

The Commissioning Log gathers all relevant information regarding the installed link and contains a checklist of all recommended commissioning tests.

Maintaining the Commissioning Log is important for tracking your installations, and to provide essential data for Cambium Networks.

Upon completing the Commissioning Log, send the log to Cambium Networks' support center at https://support.cambiumnetworks.com.

| PTP 820 LINK COMMISSIONING LOG | | |
|---|---|---|
| 1. GENERAL INFORMATION | | |
| Customer: | | |
| Radio model: | | |
| Configuration: | | |
| Radio link code: | | |
| Site 1 name & add: | | |
| Site 2 name & add: | | |
| 2. ODU/RFU | Site 1 | Site 2 |
| ODU model: | | |
| ODU p/n: | | |
| ODU s/n: | | |
| ODU SW: | | |
| Tx frequency (MHz): | | |
| Rx frequency (MHz): | | |
| Link ID: | | |
| Tx power (dBm): | | |
| ATPC on/off: | | |
| ATPC ref level: | | |
| ODU Polarization: | | |
| 3. ANTENNA AND ODU MOUNT | Site 1 | Site 2 |
| Antenna vendor and model: | | |
| Antenna size: | | |
| Mounting type: | | |
| Mounting losses: | | |
| 4. LINK PARAMETERS | Site 1 | Site 2 |

| | | |
|---|---|---|
| Link distance: | | |
| Rain zone: | | |
| Expected RSL (dBm): | | |
| Expected Diversity RSL (dBm): | | |
| RSL Main (dBm): | | |
| RSL Diversity (dBm): | | |
| Deviation from exp? | | |
| RSL ≤4 dB? | | |
| **5. COMMISSIONING TESTS** | **Site 1** | **Site 2** |
| Line loopback: | Pass | Pass |
| ODU loopback: | Pass | Pass |
| Radio BER: | Pass | Pass |
| FE test: | Pass | Pass |
| GbE test: | Pass | Pass |
| **6. MANAGEMENT CONFIGURATION** | **Site 1** | **Site 2** |
| Eth IP Address: | | |
| Eth IP mask: | | |
| Default router: | | |
| In-band VLAN | | |
| **7. REMARKS/NOTES** | | |
| | | |
| | | |
| **8. INSTALLATION INFORMATION** | | |
| Installed by: | Name: | |
| | Company: | |
| | Date: | |
| | Signature: | |
| Commissioned by: | Name: | |
| | Company: | |
| | Date: | |
| | Signature: | |